SILICON CHIP

$9.95 28/10/13
SILICON CHIP
Top
OCT 13
1310
201001065892
NDC 03956
250913 5
Greensborough Plaza No
005-001-003

SiDRADIO

Fully self-contained (computer controlled) software-defined radio

WOW! Covers 100kHz - 2GHz

"Tiny Tim" Horn Loaded Speakers

...your friends won't believe you built them...

- ☑ cheap as chips!
- ☑ sound fantastic!
- ☑ the perfect school project!

PLUS:

A Matching 10W Amplifier

Convert dead battery tools to run with Lithiums:

- much more power, for much longer
- more recharges, no memory effect

OCTOBER 2013
ISSN 1030-2662
10
9 771030 266001
PRINT POST APPROVED
- PP255003/01272
$9.95* NZ$12.90 INC GST

BE REWARDED

OCTOBER EDITION

Prices valid until 23/10/2013

Online & in store

BE REWARDED for your love of electronics

As a way of saying thank you – everyday – we've put together a loyalty programme called Jaycar Rewards. It's for our regular customers who love DIY everything electronic!

The Jaycar Rewards programme will entitle you to accumulate one point with every dollar spent* at any Jaycar Store* and be rewarded with a $25 Rewards Cash Card once you reach 500 points.

Register online today by visiting www.jaycar.com.au/rewards

*Conditions apply, company stores only and only available for retail transactions in Australia and New Zealand. See website for full terms and conditions.

Jaycar Electronics

Better, More Technical

Battery Saver Kit

Refer: SC Magazine September 2013

Cuts off the power between the battery and load when the battery becomes flat to prevent the battery over-discharging and becoming damaged. Suits SLA, Li-ion, Li-Po and LiFePO4 batteries between 6 to 24V. Uses very little power (<5uA) and handles 20A (30A peak). Supplied with double sided, soldermasked and screen-printed PCB with SMDs pre-soldered (apart from voltage setting resistors) and components.

- PCB: 34 x 18.5mm

KC-5523

NEW

$29.95

Do Not Disturb Phone Timer Kit

Refer: SC Magazine May 2013

Stop intrusive phone calls when you don't want to be disturbed (e.g. meal time). Set the timer duration to one of five settings between 15 to 120 mins and the caller will get an engaged signal until the timer times out. Kit supplied with silk-screened PCB, black enclosure (83 x 54 x 31mm) with label, pre-programmed PIC, PCB mount components and phone lead.

- No batteries required
- Works with multiple phone extensions in house

KC-5521

$29.95

ATTENTION KIT BUILDERS

Can't find the kit you are looking for? Try the Jaycar Kit Back Catalogue Our central warehouse keeps a quantity of older and slow-moving kits that can no longer be held in stores. A list of kits can be found on page 79 of our catalogue or our website. Just search for "kit back catalogue".

Jacob's Ladder MK3 Kit

Refer: SC Magazine February 2013

A spectacular rising ladder of bright and noisy sparks for theatre special effects or to impress your friends. This improved circuit has even more zing and zap than it's previous design from April 2007 and requires the purchase of a VS Commodere 12V ignition coil (available from auto stores and parts recyclers). Kit supplied with silk-screened PCB, diecast enclosure (111 x 60 x 30mm), pre-programmed PIC, PCB mount components and pre-cut wire/ladder.

- Powered from a 12V 7Ah SLA or 12V car battery.

KC-5520

$49.95

Note: Batteries not included

USB Port Voltage Checker Kit

Refer: SC Magazine July 2013

An easy way to test a USB port to see if it is dead, faulty or incorrectly wired to help prevent damaging a valuable USB device you plan to connect. Voltage is indicated using three LEDs. Kit supplied with double sided, solder masked and screen-printed PCB with SMDs pre-soldered, clear heat shrink, USB connectors and components for USB 2.0 & 3.0.

- PCB: 44 x 17mm

KC-5522

$29.95

'The Champion' Audio Amplifier Kit

Refer: SC Magazine January 2013

Suitable for general-purpose audio projects and supports microphone and electric guitar input. It uses the AN7511 audio IC to deliver 2W music power into 8 ohms from a 9 to 12V supply. Features low distortion, two inputs (mixed 1:1), mute and standby control. Power from 4 - 13.5VDC. See website for specifications. Kit supplied with silk-screened PCB, heatsink and PCB mount components.

- PCB: 101x41mm

KC-5519

$19.95

To order call 1800 022 888

www.jaycar.com.au

Contents

Vol.26, No.10; October 2013 www.siliconchip.com.au

SILICON CHIP

Integrated SDR Using A Tunable Front End & DVB-T Dongle, Pt.1 – Page 18.

"Tiny Tim" Horn-Loaded Speaker System – Page 30.

"Tiny Tim" 10W/Channel Stereo Amplifier, Pt.1 – Page 56.

Automatic Car Headlight Controller – Page 70.

Features

12 Fit Your Cordless Drill With A Lithium Battery Pack
Do you have a perfectly good cordless drill or other tool with a dead Nicad battery pack? Refurbish it with a lithium-polymer battery pack for more power, less weight and greater capacity – by Leo Simpson

53 Narrow-Band Digital Two-Way Radio
Professional two-way radio is increasingly going digital, offering much clearer signals, more users in the same amount of spectrum space and many other advantages. Here's a quick look at the technology – by Kevin Poulter

Projects To Build

18 SiDRADIO: An Integrated SDR Using A DVB-T Dongle, Pt.1
This low-cost communications receiver houses a USB DVB-T dongle plus all the circuitry for an Up-Converter and RF preselector. It covers from 100kHz to over 2GHz and is powered from your PC via a USB cable – by Jim Rowe

30 "Tiny Tim" Horn-Loaded Speaker System
You won't believe how good this low-cost speaker system sounds. It uses a single 4-inch driver, has surprisingly good bass and treble response and only needs a low-power amplifier to drive it – by Allan Linton-Smith & Ross Tester

56 "Tiny Tim" 10W/Channel Stereo Amplifier, Pt.1
Here's the perfect partner for the "Tiny Tim" speakers. It's great for beefing up the sound from your TV and includes Toslink and S/PDIF inputs to accept the TV's digital sound output – by Nicholas Vinen & Leo Simpson

70 Automatic Car Headlight Controller
Do you forget to turn on your car's headlights? Or do you turn them on later than you should? Build this automatic headlight controller and make sure you're visible to other drivers at all times – by Nicholas Vinen & John Clarke

Special Columns

40 Serviceman's Log
Servicemen watching other servicemen servicing – by Dave Thompson

66 Circuit Notebook
(1) Door Sentry Uses Encoded Infrared Beam; (2) Energy Measurement Using The USB Power Monitor; (3) PIC-Based Noisemaker Circuit For Electric Wheel-chairs & Scooters

82 Vintage Radio
A rare 1929 AWA C54 Radiola set rescued from oblivion – by Leith Tebbit

Departments

2 Publisher's Letter
4 Mailbag
38 Product Showcase
81 Subscriptions
88 Online Shop
91 Ask Silicon Chip
95 Market Centre
96 Notes & Errata

SILICON CHIP
www.siliconchip.com.au

Publisher & Editor-in-Chief
Leo Simpson, B.Bus., FAICD

Production Manager
Greg Swain, B.Sc. (Hons.)

Technical Editor
John Clarke, B.E.(Elec.)

Technical Staff
Ross Tester
Jim Rowe, B.A., B.Sc
Nicholas Vinen

Photography
Ross Tester

Reader Services
Ann Morris

Advertising Enquiries
Glyn Smith
Phone (02) 9939 3295
Mobile 0431 792 293
glyn@siliconchip.com.au

Regular Contributors
Brendan Akhurst
Rodney Champness, VK3UG
Kevin Poulter
Stan Swan
Dave Thompson

SILICON CHIP is published 12 times a year by Silicon Chip Publications Pty Ltd. ACN 003 205 490. ABN 49 003 205 490. All material is copyright ©. No part of this publication may be reproduced without the written consent of the publisher.

Printing: Hannanprint, Noble Park, Victoria.

Distribution: Network Distribution Company.

Subscription rates: $105.00 per year in Australia. For overseas rates, see our website or the subscriptions page in this issue.

Editorial office:
Unit 1, 234 Harbord Rd,
Brookvale, NSW 2100.

Postal address: PO Box 139,
Collaroy Beach, NSW 2097.

Phone (02) 9939 3295.

Fax (02) 9939 2648.

E-mail: silicon@siliconchip.com.au

ISSN 1030-2662
Recommended and maximum price only.

Publisher's Letter

Electronic voting is not needed

As you read this, the Australian federal election will have been resolved and the new government will be in power. However, it is quite possible that some Senate seats will still be in doubt due to the extremely complex ballot for the upper house. The long delay in obtaining the Senate result has prompted some commentators to advocate the introduction of electronic voting as a solution to this and other aspects of our overly complex electoral system.

One of those proponents has been Malcolm Turnbull who will probably be the Minister for Communications in the new government. He has specifically advocated electronic voting because it would reduce informal votes and also largely prevent electoral fraud whereby people vote using other names or simply do it in many different booths. He is particularly concerned about the level of informal voting which runs at about 6% of the total vote, or about 670,000 in total.

Since I have been involved as a scrutineer at the last two elections in New South Wales, I would caution against the introduction of electronic voting simply to fix these two problems. In the booth where I recently scrutineered, the level of informal voting was 6.5% but a good proportion of those votes were rejected simply because people had only filled in one or two of the boxes.

Those people had clearly indicated which person they wanted to vote for. Their votes would have been valid if optional preferential voting was allowed, as it is in some state government elections. So in my experience, a majority of informal votes could be made formal by a simple change to the electoral laws.

Optional preferential voting should be allowed in any case because most voters do not understand how preferential voting works and even if they do, they would not and could not know the labyrinthine ramifications of how the allocation of their preferences will finally be "exhausted", particularly in the Senate elections. If people cannot understand the voting system then it clearly needs fixing. And of course, preferential voting forces you to "prefer" candidates you may intensely dislike.

As to the question of electoral fraud, most of this could be fixed by simply asking people for identification before they are allowed to vote. Most people would regard this as a simple and reasonable requirement.

So both of the above problems can be addressed by simple legislation rather than the introduction of electronic voting. In any case, it seems likely any such voting would not be via the internet but would still require people to attend polling booths, as they do now. Partly this would be because many people are not computer-literate or they may disabled or otherwise unable to do electronic voting without assistance.

But even if electronic voting was to be introduced at polling booths, I still have doubts whether it would be a big advance and whether it could be done at reasonable cost. On the latter point, one only has to look at the Federal Government's costly and yet-to-be introduced e-health system to know that big system changes based on computers can be fraught with problems.

Nor would electronic voting necessarily accelerate the count in elections. To give the Australian Electoral Commission its due, the ultimate result in most seats in the House of Representatives in the recent election was pretty much known within a few hours after the close of polling. If we had optional preferential voting and practical limitations on the numbers of crackpots who can nominate for the Senate, the counting process could be done even more quickly. Overall, we should not look to technology to solve what are really societal problems. Besides which, I would rather use a pencil to fill in a few boxes rather than interact with some annoying computer program in order to vote.

Leo Simpson

"Rigol Offer Australia's Best Value Test Instruments"

Rigol DS-2000 High Performance DSOs

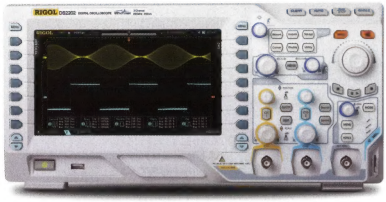

- Wider vertical range(500uV/div ~ 10V/div), lower noise floor, better for small signal capturing
- 256 level intensity graduated display
- Maximum Sample Rate 2GSa/s
- Standard Memory Depth up to14Mpts, Optional Memory Depth up to 56Mpts
- Innovative "UltraVision" technology
- Waveform capture rate up to 50,000 wfs/s
- Up to 65,000 frames hardware based Real Time Waveform record, replay & Analysis functions
- Serial bus trigger & decode (decode optional)
- Large 8 inch TFT (800x480) WVGA display

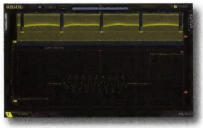

Deep 14Mpts standard memory with 256 levels intensity grading display and large 8 inch TFT LCD

Model	Bandwidth	Channels	Price Inc GST
DS-2072	70MHz	2	$1,030.70
DS-2102	100MHz	2	$1,404.70
DS-2022	200MHz	2	$1,997.60

1.5GHz Spectrum Analyser

Rigol's DSA-815 is priced as affordably as digital storage oscilloscopes and will finally allow spectrum analysers to become a standard instrument on every educational laboratory and service department benchtop.

- Frequency Range 9kHz – 1.5GHz
- Resolution Bandwidth 100Hz min
- Display 8-inch TFT LCD colour; 800 x 480 pixel resolution
- PreAmp & AM/FM Demodulation Standard
- Options:
  - Tracking Generator
  - EMI Filter & Quasi Peak Detector
  - VSWR Measurement Kit
- Supports communication with PC and remote control via: LAN, USB and GPIB (opt)

Rigol DSA-815
1.5GHz Spectrum Analyser
$1,675.30 Inc GST
Rigol DSA-815-TG
With Tracking Generator Option
$1,849.10 Inc GST

Buy on-line at www.emona.com.au

Sydney
Tel 02 9519 3933
Fax 02 9550 1378

Melbourne
Tel 03 9889 0427
Fax 03 9889 0715

Brisbane
Tel 07 3275 2183
Fax 07 3275 2196

Adelaide
Tel 08 8363 5733
Fax 08 83635799

Perth
Tel 08 9361 4200
Fax 08 9361 4300

EMONA

email testinst@emona.com.au

web www.emona.com.au

MAILBAG

Letters and emails should contain complete name, address and daytime phone number. Letters to the Editor are submitted on the condition that Silicon Chip Publications Pty Ltd may edit and has the right to reproduce in electronic form and communicate these letters. This also applies to submissions to "Ask SILICON CHIP" and "Circuit Notebook".

Australia's first year of radio broadcasting

Many readers may not be aware that November 23rd this year is a pivotal date in the story of Australian electronics. It was on that day 90 years ago that this country's first official radio broadcast took place. The station was 2SB. Its call-sign was changed 11 weeks later to 2BL, Sydney and it is still functioning today on our AM broadcast network as ABC 702.

Over the years, a great deal of misinformation has circulated about that event. Its date was wrongly given for most of the century as November 13th and the circumstances surrounding 2SB and its commencement of service were poorly understood. Another was 2FC (now 2RN, Radio National) Sydney, the second station to go on air. It is recorded by many as commencing service on the 5th December 1923 when in fact this was their first test transmission. Their service did not commence until the first official broadcast on 9th January 1924.

In investigating the tangle of truth and fiction around these events, I began to realise how little was known of this early period in Australian radio history. Particularly when misinformation was disseminated by the Post-Master General (1938), the Australian Broadcasting Control Board (1973), and the Australian Communications and Media Authority (2012), all Government bodies responsible for regulating broadcasting at that time.

Nearly two years of research have thrown up an enormous amount of material from newspapers, magazines and journals of the day. The intrigues surrounding the race to go on air, the wider politics involving Federal Governments of the period, and the evolution of the broadcast radio map, have all made fascinating reading. This applies particularly to the arguments surrounding conditions applying to the A and B Class stations.

I have finally been able to collate the most relevant of the clippings and put them together in coherent order. The resulting book, titled "The First Twelve Months of Radio Broadcasting in Australia, 1923-1924", includes explanatory links which put the clippings, letters etc in context. As well, several appendices give full accounts of key conferences and government regulations of the day. There is a wealth of information in 98 pages, which anyone with even a passing interest in the story should find valuable. It should also help cut through much of the misinformation existing in current histories of the period.

Ron Langhans,
5 Tambourine Drive,
Beaumont Hills, NSW 2155.

Note: the book can be purchased direct by posting payment to Ron Langhans. Cost is $7 + $3 p&p.

Climate science not to be criticised

I wish to object to the repeated denigration of climate science in SILICON CHIP magazine.

As amateur radio enthusiasts who use the HF bands will tell you, we have been through a period of solar minima. While this impacts on "DX" or long range communications, the more important aspect is that it reduces the Sun's heating effect. This means that since the late 1990s, global temperatures should have fallen. Instead, as you indicated in response to Peter Carter's letter (Mailbag, May 2013), they have remained flat.

Feedback on the AWA story

It was great to see readers' feedback on the AWA story (SILICON CHIP, July 2013).

Ron Langhans said the AWA communications was "Wireless Telephony, not Telegraphy". I referred to an article written in 1926 by Fisk where he calls it telegraphy. This is an old term, however at that time there was still considerable (wireless) telegraphy. Regarding the engineers not mentioned in history, Ron will be pleased to see some AWA staff wrote articles in the current HRSA journal, "Radio Waves".

Keith Walters wrote about the AWA brand on modern equipment. It's difficult to condense the AWA story into less than a book, however at a recent meeting I said there was a clear lineage to the original AWA company. A manager in the original AWA company immediately stated the original AWA did cease trading, so there's not an unbroken history back to day one.

Ray Ellis stated that the Marconi transmitting station that connected with Australia was at Caernarfon in Wales, not Carnarvon. Who's right? Depends on your politics! Since the whole of Wales was annexed by England and incorporated within the English legal system, in 1542, the Welsh have continued to maintain their language. Currently, over 560,000 Welsh language speakers live in Wales, where it's spoken by a majority of the population in parts of the north and west. The English word Carnarvon is the Brit's spelling of the Welsh "Caernarfon" – and never the twain shall meet in agreement! I have two British publications and a number of Australian that state the transmitter was at Carnarvon in Wales.

In conclusion, my thanks to Ross Stell for the extra information about the early 1950s experimental TV.

Kevin Poulter,
Dingley, Vic.

element14

The new global face of Farnell

element14 has all of your Raspberry Pi needs!

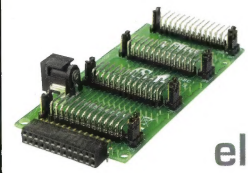

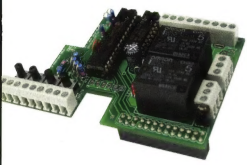

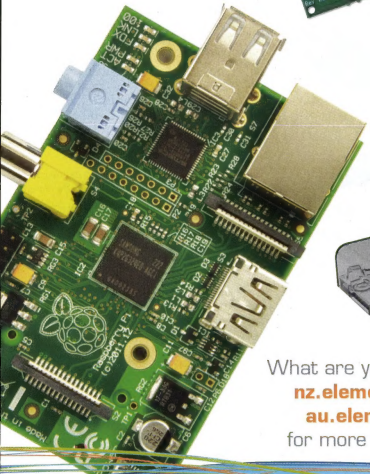

With over 80,000 ANZ locally stocked products, element14 has everything you need for your next Raspberry Pi project. From PiFace to Gertboards, HDMI cables to Wi-Fi adaptors, all in the one place! element14 also has an online community of over 150,000 members that you can engage about your next Pi project from problem solving to idea sharing, all at www.element14.com

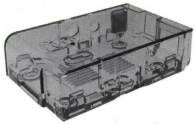

What are you waiting for? Visit:
nz.element14.com/pi or
au.element14.com/pi
for more information today!

au.element14.com | nz.element14.com

PHONE:
Australia 1300 452 488
New Zealand 0800 357 064

TECHNICAL SUPPORT:
au-technical@element14.com
nz-technical@element14.com

SALES:
au-sales@element14.com
nz-sales@element14.com

Mailbag: continued

Wind farm subsonics vs high-rise turbulence

With regards the editor's assertions that wind farms are a health risk, a little rational thinking on the causes of subsonic acoustic effects leaves me wondering why if wind farms located at a modest distance from farm-houses etc are causing health effects, there are not severe problems in city high-rise urban areas.

Surely, the huge volumes of wind circulating throughout a city high-rise area would be causing vastly more turbulence and associated subsonic air-pressure fluctuations than a wind farm comprising narrow blades on tall correspondingly narrow towers and wide spaces between the towers. Wind turbines rotate at the same speed but the blades do not pass the towers synchronously.

Furthermore, the widespread distribution of the towers leads me to reflect that a typical residence could really only be affected by one tower, not the whole wind farm as a group. I believe the editor's comments and unsubstantiated assertions are unreasonably alarming, unscientific and inappropriate. I would expect a more rational position from a magazine that so closely respects the practice of science in many areas.

Ray Ellison,
Dover Gardens, SA.

Comment: infrasonic energy resulting from wind turbulence around high-rise buildings may be much more random than the regular low frequencies produced by wind farms. These regular frequencies appear to have a direct effect on some people and also will inevitably excite audible resonances in homes close by.

Surely, logic indicates that if a major driver of a parameter falls, yet the parameter fails to respond, something must be preventing this. In this case, the blanketing effect of a range of "greenhouse" gases, including CO_2 and methane, appears a very likely candidate. It is so strong a candidate that it is no longer possible to obtain funding to prove global warming. It is considered scientific fact.

Regarding infrasound causing illness, if you tell a group of people that any particular thing will make them sick, a percentage will become ill, even if there is no scientific reason. This is called the "nocebo" effect, the negative complement of placebo.

Julian Sortland, VK2YJS,
Oberon, NSW.

Google night view not available on www.flightradar24.com

I was most impressed with your articles on flightradar24.com and ADS-B in the August 2013 issue. All went OK when accessing the site, and the only problem I had was trying to get night mode whilst looking at night departures from Sydney (YSSY). I clicked on the 3D button but could only get day mode on Google Earth. Otherwise it's very addictive indeed.

Sydney would look spectacular at night departing from Sydney Airport in the flight-deck mode. I hope a reader finds the night mode switch.

Peter Casey,
West Pennant Hills, NSW.

Comment: Sydney would (does) look spectacular at night with Google Earth switched to night view but as far as we can determine, it is not available in cockpit view on flightradar24.

Simple HUDs have drawbacks

Your recent article on HUDs in the September 2013 issue is very disappointing. I tried a simple one like this several years ago and ended up removing it from my car. Because it is not focused at your normal visual distance when driving, it became a distraction.

The problems that I had were due to that difference in focus. Firstly, there were actually two images of the display appearing to my eyes. Secondly, those images were out of focus, so that every now and then my eyes would refocus onto the display, without my meaning to do so.

Thirdly, because of this re-focussing, there was a tendency to remain looking at that image longer than you normally would by flicking your eyes down to the speedo and back again.

Proper HUDs have a negative lens between the display and the windscreen so that the image can be focussed at around 30 metres or so. I tried this on the original one that I had but could not get a strong enough lens, so gave up at that time.

I remember your comments from one of your issues years ago that it is not easy to design a proper HUD. You were correct.

Bruce Withey,
Mylneford, NSW.

Leo Simpson comments: while not defending these after-market HUDs, I am surprised at your problems with focussing. I certainly have no issues with out-of-focus images although I agree that having the image focused at a greater distance would be an advantage.

Their real drawback is that they are not bright enough when driving in sunlight and when wearing polarised sunglasses. This problem can be mitigated to some extent by fitting a black plastic or cardboard shroud over the unit to protect it from direct sunlight.

Incorrect valve has been replaced

Warwick Woods was correct in his "wrong valve used" letter to the Editor (Mailbag, page 5, September 2013), in reference to the HMV model 456 featured in Vintage Radio in the August 2013 issue. The error of taking a 6F6 valve as equivalent to an EL33 was realised by the author only after writing the article. It was discovered when the radio was taken to a meeting of the Historical Radio Society of Australia (HRSA) and a member spotted the inappropriate substitution.

The error derived from misreading the AWA-Radiotron data book as recommending a grid bias of 6.5V. A correct reading reveals a very different figure of 16.5V and recommends a 410Ω bias resistor to the cathode. The HMV circuit used 150Ω for the EL33 to provide 8.5V bias. I feel doubly foolish for misreading the data and for looking up lists of equivalents for an EL33 that definitely did not include the 6F6.

The lesson is that when there is an inconsistency, we should take the time to double check. My father-in-law is

a carpenter and put it very well when he said "measure twice, cut once". The mistake in this case carried the penalty of excessive current destroying the output transformer. The happy ending is that the radio now has the correct EL33 output pentode in place after acquiring a valve through the HRSA.

Graham Parslow, Associate Professor, University of Melbourne, Vic.

Using the Soft Starter with a fridge could be risky

With reference to the letter in Ask Silicon Chip on page 99 of the August 2013 issue, I believe R. S. is heading for disaster and should be warned not to attempt using the Soft Starter on a fridge. Most domestic fridges today will have a name-plate rating of about 100W to 150W. All fridge motors start under full, sometimes extreme, load and require a big kick to get things turning.

R. S. is right to assume that there is no centrifugal switch inside the sealed motor but the assumption that sparking would cause trouble is a little off. In fact, if there is oil on the contacts, this would actually stop the unit from working.

So, how does an older fridge start? I'm assuming R. S. has an older fridge because the amperage he quoted is extremely high for a modern unit. External to the sealed unit is a device called a hot-wire relay. The current to the motor goes through about 50-75mm of resistance wire. Under the influence of the starting current, the wire expands, thus causing a set of contacts to open; the start winding is then out of circuit. The running current is sufficient to keep the wire expanded enough to keep the points open. When the motor stops, the wire cools and resets ready for the next cycle.

If R. S. persists with the Soft Starter he may have a situation where the start winding is not taken out of service quickly enough to prevent it burning out, or he might get a relay lock-out situation where the hot wire expands enough to move the contacts further to a lock open situation. If this happens, then when his domestic manager starts to complain that the fridge contents have a peculiar smell, he will have to call a fridge technician who will fiddle about underneath the fridge for, at best, a few minutes, and then request R. S. to hand over a week's wages or so, having simply reset the relay.

Now a comment on the generator. I also have a 3000W alternator. I write 3000W because that is what is on the name plate; the concept of a difference between kW and kVA was not widely understood when this baby was built. My set will easily start a one-horsepower capacitor-start motor. This would have a run current of about 4A and a start current of about five to eight times that, depending on the load; easily 2-2.5 times the alternator capacity. Any decent alternator should be able to provide this surge. The name plate capacity is simply the maximum current that can safely be drawn continuously.

In fact, during the big fires of 2009 I ran, in order of circuit connection, freezer, fridge, computer, two modern flat panel TVs and a 1.5 HP air-conditioner. The air-con has an internal soft-start system but I was horrified to find

Mailbag: continued

Time-line for the invention of the transistor

I read with interest Andre Rousseau's letter in the August 2013 issue of SILICON CHIP, concerning Lilienfield's claim to be the inventor of the transistor. A brief timeline will help clarify the situation, as follows:

1904: Bose and Pickard apply practical, solid-state detectors to radio reception.

1925: Julius Lilienfeld files patent for the design of a field-effect amplifying device; finally built and shown to be practical in the 1990s.

1928: Lilienfeld files patent for a junction transistor (US 1877140), using copper sulphide as the semiconductor.

1935: Oskar Heil files patent for a field-effect device that is the forerunner of modern Metal-Oxide-Silicon devices, superseding Lilienfeld's field-effect design.

1947: John Bardeen and Walter Brattain of Bell Labs demonstrate the point-contact transistor, file patent in 1948.

1948: Herbert Matare, having discovered the point-contact transistor effect during World War II, patents the "Transistron", reliable enough to be used in French telephone exchanges, beginning in 1949.

1948: William Shockley patents a junction transistor identical in principle to Lilienfeld's 1928 patent – presumably granted because Shockley's device used only germanium. John Saby patents first practical junction transistors in 1952.

Thus I agree with Mr Rousseau concerning "prior art" to Shockley and the variety of "semiconductors". Many otherwise fine technical histories focus solely on Bell Labs and Bardeen, Brattain and Shockley. Like most inventions, many researchers contributed. Indeed, some of Bardeen, Brattain and Shockley's early "transistor" proposals were rejected by Bell Labs' own patent lawyers as owing "too much" to Lilienfeld.

You may read the entire history (with complete references) in upcoming issues of the Historical Radio Society of Australia's magazine, "Radio Waves".

Ian Batty,
Harcourt, Vic.

Fleming patented the diode in 1904, De Forest developed the Audion (triode) in 1907 and the triode was further improved over the next few years. It was not until WW1 that the triode became a sufficiently reliable device to be of much practical use.

The Schottky diode took many years from Ferdinand Braun discovering the non-linearity of conduction of metal sulphides in 1874, to J. C. Bose's 1904 patent for a cats-whisker detector, to being commercially available as the Westector (1930s), and then on to its modern form in the 1960s.

The Light Emitting Diode (LED) was reported by H. J. Round in 1907 and became a commercial success after 1968. A form of PN junction diode was patented by G. W. Pickard in 1914 (known as the Perikon detector) and was widely used on ships until at least the 1920s but the modern form of junction diode was not available until the 1950s.

In the case of the FET, Lilienfeld patented the design of a P-channel, insulated-gate FET in 1926-30. Oskar Heil patented the same idea (except his device was N-channel) in 1934. The Bell Labs team tried and failed to make FET devices in the mid-1950s and it took until 1959 before it became reality. Commercial devices took several years beyond that.

A tricky problem must be solved to make FETs which work well and have reasonable gain. This is where "surface states" of the semiconductor material reduce the amount that the gate's electric field can penetrate the FET's channel.

Lilienfeld's designs had a very thin layer of material making up the channel, suggesting that he had also struggled with this problem. He used batteries of 30V for the B+ supply (drain) and 15V for the 'C' supply (gate bias), implying a very low gain device (voltage gain of about two).

The semiconductor material that he used, copper sulphide, is naturally P-type and the batteries are shown with the correct polarity for this type of device. This confirms that Lilienfeld had done some practical work, because if his device was only theoretical, he would probably have shown the circuit with the same polarity as for a valve.

In one of his patents, Lilienfeld men-

that despite this, the engine still went to full throttle and yet was not able to carry the load. It was down to 185VAC and about 45Hz but everything continued working and still does.

I am currently fitting a 6.5HP engine to replace the 70-year-old 4HP engine in the hope of improving things. In fact, I could only get about 2000W (resistive) without overloading the engine and this is about right if you do the maths.

So why is R. S. in trouble? First off, 210VAC should run and start anything within the amperage range, plus quite a bit more on surge. I suspect his readings might be a bit doubtful. The most likely cause is that he is using a modern generator (DC) with an inverter to get his 240VAC. Many modern units use this system. If this is so, maybe he will never start his fridge because the unit just can't do it.

There is, however, one possibility that might help. Ensure that the engine is actually running at full throttle before starting the fridge. Most of these inverter-type alternators only throttle up the engine to meet the load and it is possible that the governor response is not fast enough to provide enough power to start the fridge.

My own system has massive flywheels and a huge rotating armature to carry the surge by sheer momentum until the governor catches up. I hope my new engine can do as well.

Graeme Burgin,
Ararat, Vic.

Electronic devices have a long incubation time

With respect to the letter about the invention of the transistor in the August 2013 issue, most electronic devices have had a surprisingly long development time from first proposal to commercial success. For instance, thermionic emission was discovered by Edison in 1880. Edison patented an application for it but never put it to any practical use.

tions a voltage gain of up to five. However, even this is fairly poor performance for a transformer-coupled amplifier. By comparison, the 01A triode of the 1920s had a voltage amplification factor of eight and would have required 1.5V grid bias or less for 30V on the anode.

FET manufacture has generally required clean-room technology which was not readily available even in the 1950s. The bipolar transistor works in a completely different way (minority carriers) from a FET and one which was not anticipated by Lilienfeld or anyone else until the 1940s. The Bell Labs group certainly did not invent or develop the FET in the 1940s but they should be given most of the credit for the bipolar transistor.

Even then, the point contact transistor that they initially described and the junction transistor that we buy now have very different properties. For instance, the parameter "alpha" (gain in common-base configuration) is slightly less than one for a junction transistor but can be more than one for a point-contact transistor.

In recent years, a lot of other semiconductor materials have been investigated, including some old favourites from long ago such as Zincite (zinc oxide), silicon carbide etc. If they become more commonly used for electronic devices, this magazine may need to be renamed "SEMICONDUCTOR CHIP".

Robert Bennett,
Auckland NZ.

Amateur radio transmission powers curtailed

Australian radio amateurs had a big shock and disappointment in early August, when our spectrum regulator, ACMA, decided not to set in place more permanent arrangements allowing Australian radio amateurs to use a maximum transmission power level of 1kW PEP (peak envelope power).

A 'high power trial period' was initiated by the ACMA last year, open to amateurs who wished to apply, ending August 31st, 2013. It was the expectation of Australian radio amateurs that, providing there were no major difficulties, we would finally be 'brought in line', matching the maximum power levels of even near neighbours like New Zealand who are authorised to run 1kW PEP.

As part of the trial conditions, the ACMA issued clear instructions that participants were to 'self-assess' their stations and environment to ensure compliance with EMC (electromagnetic compatibility) standards – thereby meeting their licensing obligations.

It seems that, in the EMC area in particular, amateurs did not meet expectations. Apparently, the amateurs that were audited displayed "insufficient knowledge and awareness" of their obligations. Considering the many aspects of the quite complex area of 'electromagnetic radiation' and ensuing compliance requirements, it's not at all surprising that many amateurs have not applied themselves as diligently as required in the licensing conditions, perhaps not realising, or caring, to meet their responsibilities.

There were several points made by the ACMA for not continuing moves towards new power limits for amateurs, however the main issue appears to have been the "failure

CircuitMaster 4000M
Precision Active Oscilloscope
abi
Only $3,995 ex-GST
Built to :
✓ To simplify the safe probing of fine pitch PCBs.
✓ To combine traditional and new test methods in one instrument.
Active Mode, WaveStack, Logic View, DVM
Logic Thresholds showing mind level signal
VI Test with comparison against stored curve
Equipped with:
• 2x Oscilloscope Probes X10/X1.
• 2x Red/ Black 4mm probe set.
• 2x BNC to 4mm adapter.
• MultiWay Cable with LogicView clips.
• USB cable.
• Footswitch.
• DIL test clip: 40 way (0.6") and 16 way (0.3").
• CircuitLink software on CD-Rom
• AIMs Software to control the capture of data and to recall for live comparison. (Option)
Key Features:
• 100MHz digital storage oscilloscope.
• 0.1% 24 bit digital DC voltmeter.
• Active mode - DC and AC function generator.
• FirmFlex node impedance analyser.
• Multi-range 2 channel VI tester with pulse outputs.
• 2 analogue channels + external trigger.
• Multiway 40 channel signal multiplexer.
• Automatic and cursor waveform measurements.
• WaveStack signal acquisition memory.
• Stored and live tolerance mask waveform comparison.
• LogicView 4 channel variable threshold logic analyser.
• USB interface for updates and waveform storage.
TM TekMark
Please quote code: SIABII033.
www.tekmark.net.au • Call 1300 811 355 or email enquiries@tekmarkgroup.com

xLogic
New in AUSTRALIA and NEW ZEALAND
EASY PLC's starting from under $50 !!! Conditions apply!
Economic crisis ? Not with our prices!!!
Our Aim: Highest Quality, Lowest Price!
GOLD finished circuit boards, NXP (former PHILIPS) ARM M0 and M3 processors, 105C rated capacitors; high quality terminals
12-24V DC or 110-240V AC models,
Ideal for Electricians, Service (wo) men, OEMs, cars and trucks, Home Automation, Hobbyist, Schools, TAFE,...
GSM, SMS, ETHERNET, MODBUS Master/Slave,
Analogue Inputs/Outputs, built in RTC, up to 100h backup !
Up to 96 DI, 90DO, 44 AI and 18 AO, PWM, up to 60 kHz counters,
10A rated relays (transistor 0.3A) DIN rail or wall mount
EASY to program (Function block) LADDER coming soon!
CE certified, RoHS, all test certificates available on request.
For the price of our ELC 6 (picture above on left) you hardly ever will find a single standard timer on the market, BUT we offer 4 inputs, 2* 10A (res. load), 2A (ind. load) relay outputs, RTC, 35 different function blocks, Modbus RTU support, you even can connect it to a HMI !
FREE SOFTWARE with simulator NO restriction!
Visit www.xlogic.com.au

Mailbag: continued

ACMA is not much help with TV interference

My antenna and distribution system were professionally installed. I had perfect reception here on all digital channels.

About a year ago, I started getting severe pixellation and sometimes total jamming on the VHF digital channels 2, 7, 9 & 10 but not on the UHF channels SBS & C31. One or two of the channels at a time are jammed for a few hours to a couple of days. Then the interference stops for a couple of days or moves to one (or two) of the other channels. I suspect a frequency-switching wireless modem or LAN somewhere around here.

It may be just coincidence but the problem began around the time the new electricity 'smart meters' were installed in this area. They use a wireless network but I'd need to know more about them before pointing a finger in that direction.

It isn't easy to find government help with TV interference. There are no government TV ads or junk mail propaganda leaflets about this and there is nothing in the phone book. The latest name for the department that is supposed to deal with it is the Australian Communications and Media Authority (www.acma.gov.au), but the gist of their web pages about TV interference is:

(1) Turn off and disconnect all other devices in your house – one of them may be causing it.

(2) Replace your antenna, masthead amplifier and all cabling and fittings (at your own expense).

(3) If that didn't work, contact one of the authorised antenna specialists on our list for your area and arrange for a service call (at your own expense).

(4) The service technician will perform an inspection of your system and a spectral analysis of the signal at the wall socket (at your own expense).

(5) If the analysis shows external interference, the technician will fill-in the details on a summary sheet. Send that sheet to the ACMA along with a completed 'Request for Investigation' form. They will then try to identify the cause of the interference for you.

(6) It is your responsibility to approach whoever might be causing the interference and ask them to stop it. If they don't stop it, you could try taking your own legal action but that could be very expensive.

There are laws against causing TV interference but the government seems reluctant to enforce them. Ah well, that area isn't easy, automated and highly profitable like speed-camera fines. And the government has itself caused this problem with sell-offs of spectrum too close to TV frequencies.

David E. Jones,
Clifton Springs, Vic.

ANTRIM TRANSFORMERS
manufactured in Australia by
Harbuch Electronics Pty Ltd
harbuch@optusnet.com.au

Toroidal – Conventional Transformers
Power – Audio – Valve – 'Specials'
Medical – Isolated – Stepup/down
Encased Power Supplies

Toroidal General Construction

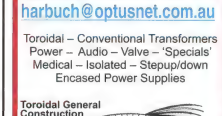

Comprehensive data available:
www.harbuch.com.au
Harbuch Electronics Pty Ltd
9/40 Leighton Pl, HORNSBY 2077
Ph (02) 9476 5854 Fax (02) 9476 3231

of amateurs to demonstrate an understanding of the EMC requirements involved".

At this point, it is only fair to point out – as stated by Phil Waits of the Wireless Institute of Australia (WIA) – "radio amateurs are not being singled out here . . . compliance . . . applies to all apparatus licensees . . ." Any moving forward regarding new power levels will involve the ACMA and WIA working together with radio amateurs to achieve satisfactory fulfilment of the EMC requirements.

The 'electromagnetic compatibility' (EMC) aspect of the matter brings to mind concerns you have expressed many times in your editorials when drawing conclusions involving science based matters.

The editorial points referred to appear ultimately to distil to your concern over 'absolute' conclusions being drawn, for instance, by scientists formulating IPCC 'belief systems' on global atmospheric physics et al.

It would seem that to some extent parallels can be drawn with regard to 'human exposure to electromagnetic radiation' matters, considering present knowledge levels in this area. Who exactly is in such a confident place as to correctly and accurately interpret the mounds and mounds of massively complex scientific data arising from the many studies carried out in both branches of science?

In my opinion, knowledge of both branches of science is surely likely incomplete and probably much more complex than currently thought! As I understand the 'EMC/human exposure' issue – making any absolute conclusions regarding negative health effects due to exposure to electromagnetic radiation (EMR) is most difficult and fraught with likely error.

From what I can tell, there are certainly known, measurable and definable effects from suitable levels of electromagnetic energy on the human body (mainly harmless thermal) – but there should be no 'blanket conclusion' that all electromagnetic radiation is a health issue. The issue is obviously a very complex one and defining effects with any sense of accuracy requires one to define exactly which parts of the body will be affected in what way, ie, different

parts of the body absorb RF energy at different levels etc.

For instance, until recent decades, broadcast technicians didn't hesitate to climb 'live' medium-frequency towers which were still spitting out several kW of radio frequency energy – the technicians apparently not suffering damage to their health! I've met many ex medium-frequency RF workers in their 'old age' and none claim any effects from their MF over exposure!

In the case of the high-frequency (HF) spectrum, more representative of typical amateur radio operation, the only known measurable effect is still purely thermal as far as I am aware. I believe that the field strength needed to produce such a quantifiable result is way in excess of the proposed ACMA amateur power levels of 1kW PEP!

Considering the difficulties associated with accurately concluding virtually anything in regard to effects on human health with any certainty (especially at HF frequencies mentioned), I find it quite unfair of spectrum regulators, here, or elsewhere in the world, to expect mere amateurs, so to speak, to accurately 'self-assess' their stations for EMC or truly understand the implications of the ARPANSA standards they are seeking to enforce.

As yet, neither the WIA nor ACMA have provided any real education to amateur operators in the complex area of EMC and human exposure to radiation levels. It's left to the individual to meander their way through EMC compliance information' as best they can. It's of no real surprise then, that the 'average bloke' apparently chosen for the various recent ACMA audits "did not meet expectations", as stated.

My understanding is that the ARPANSA standards the ACMA seek to ensure are based on international standards. How is it then that spectrum regulators of other countries see fit to allow their amateur citizens be entrusted with 'high power'? Considerably higher power in most cases, actually!

Do overseas spectrum regulators not also require their radio amateurs to 'self-assess' accurately? Are they getting it right?

From what I can determine, amateur radio operators in other countries do not as yet appear to be under the same level of scrutiny as we in Australia currently are!

It appears likely that increased bureaucratic regulations will be impacting our hobby more and more. World-wide, general ignorance, over-concern and just plain superstition seem to abound regarding invisible, mysterious and 'scary' radiation from any source.

From my observations, it seems individuals or groups managing to bring a halt to the placement of mobile phone towers near to schools etc never think twice about sticking a phone right to their ear (and therefore brain!) when answering an incoming a call. No knowledge or concept of the 'inverse-square' law exists in their thoughts, making a mockery of their brave stand against radiation fears!

The resulting political pressure this sort of ignorance brings upon governments and communications authorities world-wide is enormous and will foster more and more bureaucratic legislation to emerge from spectrum managers world-wide.

Aubrey McKibben, VK3QD, Swan Hill, Vic. SC

Digital Panel Meters at Analogue Prices

NEW RELEASES!!

Add the professional touch to your power supply or auto equipment. Easily installed, with their snap-fit **48mmx29mm bezels**, these matching meters feature highly visible, green 0.56" LED displays.

The **KSDVM -100 0-99.9VDC VOLTMETER** may be used in 2 or 3-wire applications where the measured voltage is above its 4.5V – 28V power supply range

Yours Now !! $10.35 inc. GST Plus $7.50 P & P

Your **KSDAM -50 0-50.0Amp DC AMMETER** will find 100s of application in battery chargers, solar panel arrays and lab power supplies.

* **$24.90 inc. GST Plus $7.50 P & P**

Save $7.50 on Postage
Buy the two meters and Pay one Postage Price!

For more details and to buy on-line

KitStop electronics – the fun starts here

www.kitstop.com.au
P.O. Box 5422 Clayton Vic.3168
Tel:0432 502 755

Radio, Television & Hobbies: the COMPLETE archive on DVD

- **Every issue individually archived, by month and year**
- **Complete with index for each year**
- **A must-have for everyone interested in electronics**

This remarkable collection of PDFs covers every issue of R & H, as it was known from the beginning (April 1939 – price sixpence!) right through to the final edition of R, TV & H in March 1965, before it disappeared forever with the change of name to Electronics Australia.

For the first time ever, complete and in one handy DVD, every article and every issue is covered.

If you're an old timer (or even young timer!) into vintage radio, it doesn't get much more vintage than this. If you're a student of history, this archive gives an extraordinary insight into the amazing breakthroughs made in radio and electronics technology following the war years. And speaking of the war years, R & H had some of the best propaganda imaginable!

Even if you're just an electronics dabbler, there's something here to interest you.

NB: Requires a computer with DVD reader to view – will not work on a standard audio/video DVD player

Order online from www.siliconchip.com.au or use the handy order form in this issue

FIRE UP YOUR CORDLESS DRILL WITH A LITHIUM BATTERY PACK

Do you have a perfectly good cordless drill or other tool with a dead battery pack? Repacking it with sub-C Nicad cells used to be the standard approach to recycling but now you can do much better – use a lithium polymer battery pack. You'll get more battery capacity for less weight and you can discharge them more deeply.

by LEO SIMPSON

Back in December 2006 we featured an article on how to bring dead battery packs for cordless power tools back to life by re-packing them with sub-C Nicad cells. Fast forward seven years and the problem still exists, although the cost of sub-C cells makes the proposition not as attractive as it was. And if you don't upgrade the charging circuit with our Cordless Power Tool Charge Controller, you can look forward to the same battery pack failure in a few years time.

But now there is a better way – upgrade to a lithium polymer battery pack. With the rising popularity of radio-controlled helicopters, Li-Po battery packs have become a relatively cheap and very potent power source.

They are far more energy dense than anything based on Nicad or nickel

metal hydride cells and don't suffer from "memory effect" which is a (bad!) feature of Nicad-based battery packs.

This trend has been reflected in the rising sales of Li-Po cordless drills. Almost all 18V, they are lighter and more powerful than the superseded Nicad-powered drills but there is a big drawback – they are expensive. And what do you do about a perfectly good old drill with a dead or dying battery pack?

This problem confronted me recently when I went to use a 24V cordless drill which I purchased some years ago from Dick Smith Electronics. It's a powerful but heavy beast which can also be used as a hammer drill and indeed I have used it many times with masonry bits.

Sadly, its battery pack has been gradually losing capacity, to the point where it would only drill a few holes in timber after a recharge, whereupon it would just wimp out.

Clearly, a replacement battery pack for this drill is highly unlikely to be available now and even if it were, it is likely to cost more than the original price of the drill plus its battery pack, carrying case etc. Yes, you can get battery packs re-packed but again, the cost would be very unattractive!

However, the drill is quite ruggedly built and has a gearbox with metal gears rather than plastic so I was loath to discard it.

OK. So I decided to follow the lead given in the June 2013 issue of SILICON CHIP in an article on Lithium batteries. In fact, that article was devoted to $LiFePO_4$ (lithium iron phosphate) rechargeable batteries but this article is devoted to the more potent lithium polymer batteries used by aero-modellers which are available in a wide range of capacities and in 11.1V and 22.2V packs.

The original dead (and as-yet unmodified) 24V Nicad battery pack from my cordless drill with the more-powerful 22.2V Li-Po replacement alongside, showing the relative sizes. The Li-Po is an easy fit inside the old battery case.

In my case, I wanted to replace the original 24V 1.2 amp-hour Nicad battery pack with an equivalent or better Li-Po battery.

To cut to the chase, the one I chose is a Zippy 35C series 6-cell 22.2V pack with a capacity of 2450mAh, almost double the energy rating of the original battery pack. As an aside, to calculate the energy rating, just multiply the battery's nominal voltage by its amp-hour rating. Multiplying 22V by 2450mAh gives an answer of 54.39 watt-hours.

Even better, the nominated Li-Po battery pack weighs 390 grams which is significantly less than the original

Undoing the (in this case four) screws allows the top of the battery to be lifted off, revealing the 20 Nicad cells packed inside (20 x 1.2V = 24V). Note the two cells on top which hold the battery connector – this part is important!

The original cells are now effectively garbage (but note the symbol telling you not to dispose of them in the trash). However, you do need to carefully remove the battery connector from the top two cells, noting + and – connections.

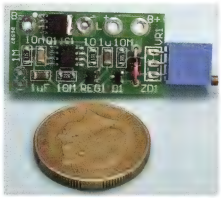

Reproduced from our September 2013 issue, this is the tiny "Battery Lifesaver", a very worthwhile add-on for any battery powered tool. It prevents the battery being permanently damaged by over-discharging.

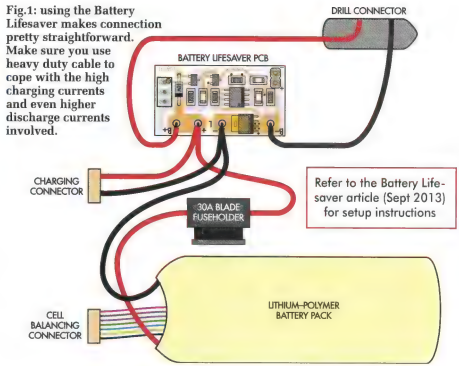

Fig.1: using the Battery Lifesaver makes connection pretty straightforward. Make sure you use heavy duty cable to cope with the high charging currents and even higher discharge currents involved.

and its discharge rating is very high: 35C constant; 45C burst.

This means that it is rated to deliver a current of 85 amps with a peak of 110 amps!

Now it is highly questionable whether the output leads of the battery would survive more than a few seconds at such huge currents but does indicate that it would be more than adequate to cope with the discharge current of a 24V cordless drill, even if you stalled it.

So why did I choose that particular model? The main reason is that it will fit into the battery holder of the drill – pretty important. A smaller battery could have been fitted but that would mean less battery capacity.

Now a search will quickly reveal that there are numerous sources of these batteries via the internet but many of these are a questionable proposition.

There are plenty of reports where people have purchased batteries on-line (did someone mention China?) only to find that their stated capacity is mythical, to say the least.

You also need a suitable charger and this is where Li-Po batteries are far more demanding than Nicads, although most drills with Nicads would give far better life from their battery packs if they had better designed chargers.

There are plenty of chargers for Li-Po batteries but most of these are not intended for use with 230VAC mains supplies – this seems to be related to the fact that most of these Li-Po battery packs are used away from mains source.

Having said that, most Li-Po chargers are designed for an input of around 11 to 18V at 5A or more, ie, 85W or more.

Which means that these chargers are fine working from 12V batteries in cars or 4WDs but that means they need a charger and a 230VAC supply which can deliver 12 to 18V at about 6A.

With all of those questions to be answered, I decided to purchase the battery, a suitable charger and 230VAC switchmode supply from the one source: Hobby King, www.hobbyking.com

To be specific, in addition to the above Li-Po battery, I purchased a Turnigy Accucell 6 charger and a Hobby King 7A power supply ($18.16). The charger is capable of charging Li-Po or LiFe (lithium iron phosphate), Nicad or NiMH plus lead acid batteries.

Furthermore, it can charge lithium batteries up to six cells, Nicad/NiMH up to 15 cells and lead acid up to 20V. All up, including accessory leads, the total cost was around $82.

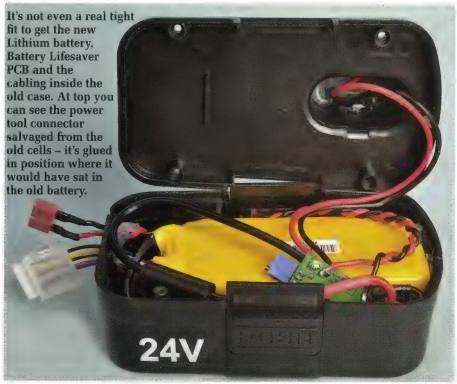

It's not even a real tight fit to get the new Lithium battery, Battery Lifesaver PCB and the cabling inside the old case. At top you can see the power tool connector salvaged from the old cells – it's glued in position where it would have sat in the old battery.

I hasten to say that this is more than I paid for the drill originally but probably less than a replacement Nicad battery pack, if one to suit the drill was actually available.

It is also considerably less than the cost of an equivalent new drill with an 18V lithium-polymer battery pack.

Fitting the battery

Superficially, fitting the lithium-polymer battery in place of the old Nicad batteries is straightforward; unscrew the battery case, remove old, bung in the new.

In practice, it is quite a bit more involved because the new battery pack has nine leads; two for the main battery leads and seven for sensing the individual cell voltages.

This last feature is most important because all the cells must be equalised for correct charging, something which the purchased charger will do.

I also wanted to fit a high current fuse because lithium-polymer batteries do represent a fire hazard if their output is shorted. Hence I fitted a 30A blade fuse holder and 30A fuse (Jaycar SZ-2040; SF-2139).

However the most important part of the new battery installation is a method of avoiding over-discharge. Lithium-polymer batteries will be damaged or destroyed by being over-discharged.

In normal applications such as in model aircraft, the speed controllers contain circuitry to prevent over-discharge but in this drill application we have to provide it separately. We assume that all 18V lithium-polymer drills also incorporate over-discharge protection.

Fortunately, we have an ideal means of preventing over-discharge in the form of the Battery LifeSaver featured in last month's issue. This has very small PCB and has a profile so that it can be squeezed into tight battery compartments.

You will need to purchase a kit for the LifeSaver (available from Jaycar; Cat KC-5523 @ $29.95) or otherwise obtain the components and assemble it according to the instructions in last month's article (September 2013).

The PCB is available from SILICON CHIP.

Assembling the new battery pack

The first step in the process is to remove the old Nicad cells from the drill's battery pack. In my case, it was pretty straightforward.

Just remove four self-tapping screws and the old Nicad cells slip out easily – they are all spot-welded together to make up the 24V pack.

Two cells are in the small cylindrical section which carries the contacts for the power connection inside the handle of the drill. Pulling out those last two cells also pulls out the springy contacts which are also spot-welded.

Now it is most important that the polarity of the leads connecting drill connector are correct.

If the polarity of the supply connecting to the drill is reversed, the drills inbuilt speed controller will not work and there is even the possibility that if will be damaged.

So it is important to check the polarity before you make the connections. Have a look at the cylindrical section of the battery pack and you should see + and – symbols moulded into it. These can be clearly seen in a number of the photos in this article.

The contacts, still on their moulded plate, must be clipped off and ultimately be connected to two leads which will connect to the Battery Lifesaver, according to the diagram of Fig.1.

We used some of our old friend, JB Weld, to ensure the contacts stayed in exactly the right spot. (Just make sure you don't let any glue get on the outside of the contacts themselves, as this would make a very nice insulator.)

Commercial Li-Po Tools: Do they check cell status?

When preparing this article, we wondered: do commercial battery-operated tools using Li-Po batteries have the ability to equalise cells or even check individual cell status, as this project does?

The easiest way to check this was to scour the shelves at a couple of major hardware stores – and we have to report that we didn't find a single tool that had any form of charger multi-connector, as would be required if it was capable of monitoring and equalising individual cells. That's not to say *none* have such a feature – but we couldn't find any!

Therefore, we have to assume that the battery life of most Lithium battery power tools, even those in the stratospheric price range, may be just as compromised as would much cheaper/older tools using Nicad or NiMH batteries.

All it takes is one cell below par – and that is not just a possibility, it's a certainty as the tool ages – and you would find that battery life will very quickly start to fall. And without individual cell monitoring, there's nothing you can do to eliminate this or even minimise the problem.

A stupid boo-boo to be avoided

Before going any further, you need to check how the new battery pack and other components will fit inside the case. Now there is a trap here and I fell right into it.

The completed "new" battery, offering much more "grunt" and with individual cell monitoring/equalising, should last *much* longer than the original Nicad pack. If there is enough space in your battery, you might even be able to glue the two sockets virtually inside the case for an even neater finish.

You may have noticed that there is a difference between the photo in the opening shot (and the one below) and the photos on pages 14 and 15. Haven't twigged to it yet? Look at where the charging and monitoring sockets emerge from the battery pack . . .

I did a trial assembly to see how it all fitted together comfortably. I (foolishly) reasoned that it would be best to have the two sockets emerging from the back of the battery because that seemed to be the logical place for them.

So I cut two slots in the back of the compartment; one slot for the 2-way lead for the battery charging connector and the other for the 7-way lead from the lithium-polymer battery pack which is necessary for monitoring and equalising the cells during charging.

I then assembled everything, including anchoring the leads with silicone and screwed it up.

The two battery connecting leads need to hang out from the finished battery pack so that it can be charged when necessary. (Your battery might have the room to mount them deeper inside and glue them in place, which would look a little neater).

After charging the new battery pack, I duly clipped it into the drill, switched it on and it all worked. Beauty!

Later that day I went to put the drill into its carrying case and then my boo-boo became abundantly clear. As the two connecting leads exited from the rear of the assembled battery pack, they effectively stopped me closing the lid of the carrying case. Naughty words were uttered.

So I had to do it all again, with the leads correctly exiting from the front of the case. Most drills of this type come in a carry case so would need to be treated in the same way. Learn from my mistake.

You can see how the various wires are tucked into the case. You need to use fairly thick hook-up wire to ensure good current carrying capacity. However, if they are too thick it becomes difficult to make them sit inside the case while you clip it together.

In use

As our photo on p12 shows, charging a Lithium-Polymer battery properly is a little more complicated than bunging the battery in the charger, as you would have done originally. Apart from the obvious need to plug in both the charging socket and balance socket to the charger, you need a charger designed specifically for the purpose of charging LiPos.

Hobby King's $15 "LiPro Balance Charger" will also handle Nicads, NiMHs, SLAs, and more.

And while this might set you back a few bob, once you've switched to LiPo batteries you'll wonder why you ever persevered with Nicad or NiMH.

After we purchased our setup, we even found a cheaper charger (~$15 at Hobby King). They even admit it is a copy of the real thing but we bought one anyway and found it worked just as we would have expected.

It will charge LiIon, LiPo/LiFe (1-6 cells), Nicad/NiMH (1-15 cells) and even lead-acid (2-20V) with charge rates from 0.1 - 6A, from a DC input of 11-16V.

Hobby King "CELL CHECKER": a great investment!

While gathering together the bits'n'pieces for this article, we happened to notice this USB flash-drive-sized cell checker, also at Hobby King. It certainly looked interesting from the description, so we added it to our order.

We've got to say it is simply brilliant for checking Li-Po cells with a multi-pin monitoring "port". And at the price – a princely $3.15 (plus P&P) if you use Lithium Polymer batteries, you cannot afford NOT to have one of these in your toolkit. It's an incredibly cheap investment for what amount to relatively expensive batteries.

All you need to do is connect the integral plug on the Cell Checker to the balance socket of your battery pack. The Cell Checker then steps through each cell (up to six in the battery), displaying the individual cell voltage on the digital readout then the total voltage of the battery.

If you check the battery before and after charging, it will give you a very good indication on the state of all cells.

Weighing just 13g and measuring 70 x 24 x 13mm, it can attach to your keyring so you'll always have it handy. Visit www.hobbyking.com for details. SC

The Ultimate In Benchtop Soldering.

THERMALTRONICS

TMT-9000S-2

Thermaltronics® 40W RF Induction Soldering Station

Revolutionary new soldering station design uses special alloy tips for incredibly fast start up time (under 10s) & heat regulation. Cartridge tip design eliminates the need for ceramic elements. Dual switchable outputs for use with extra handle. Includes 1.5mm chisel tip for soldering between 350° and 398°. Higher temperature tips available - up to 475°C.

Thermaltronics® are widely used in the medical industry for servicing sensitive equipment.

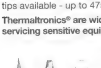

Add on tips to suit your application...
T 2025 0.5mm Conical Tip.
T 2029 1.5mm Chisel Tip.
T 2034 5.0mm High Temp. Chisel Tip.
More options available - check online.

$25.95 ea

With Curie-Heat Technology for rapid heat up & incredible temperature regulation - eliminating component damage from overheating.

T 2020

Check out the YouTube demonstration video at the Altronics website.

$550

CHEMTOOLS

Consumables for the electronics workbench.

Maintain & Repair Your Iron Tips
These tip tinners maintain your soldering iron tips for best performance! T 1326 model suits regular tip maintenance, whilst the T 1328 heavy duty is for recovery of blackened oxidised tips.

$12.50

T 1326 Light Duty
T 1328 Heavy Duty

Circuit Board Cleaner Spray
Removes oil, grease, dirt and resin based flux from boards. Great for servicing! 420ml.

$11.95

T 3155

Flux Remover
Disperses flux residue from recently soldered boards and components. Suits leaded and lead free use. Leaves no residue. 300gm.

$11.95

T 3140 300gm

Also available in 5 litre tins.

Contact Cleaner
Suitable for cleaning all non-arcing contacts, edge connectors and switch mechanisms. Fantastic for cleaning noisy pots. 350g.

T 3160

$15.95

Quality Desoldering Braid
7.6 metre rolls! Draws molten solder away from joints.

Size	Part	ONLY
0.64mm	T 1211	$18.95
1.27mm	T 1213	$18.95
1.9mm	T 1215	$19.50
2.54mm	T 1217	$22.95
3.18mm	T 1219	$23.25

H 1621 **$75**

Big 1kg bulk buy!

Silicon Potting Compound
Seal in circuits from moisture and dust. Also provides impact protection. Easy 1:1 mix ratio. **1kg.**

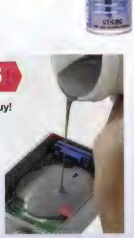

H 1650A **$12.95**

SMD 'Easy Soldering' Flux Gel
Halogen free flux gel for long term reliability and ease of soldering. Suits normal and lead free reflow soldering processes. 10g syringe.

H 1640 **$11.95**

Leaded Solder Paste
Ideal for use in PCB assembly, prototyping and reflow soldering. 12-14 hour tack line. Meets Bellcore and IPC requirments. 10g syringe.

Available from Altronics & Dealers Around Australia

» **Springvale VIC:** 891 Princes Hwy » **Auburn NSW:** 15 Short St » **Perth WA:** 174 Roe St
» **Balcatta WA:** 7/58 Erindale Rd » **Cannington WA:** 6/1326 Albany Hwy

ALTRONICS
Order Today: 1300 797 007
or shop online 24/7 at www.altronics.com.au

© Altronics 2013. E&OE. Prices stated herein are only valid for the current month or until stocks run out. All prices include GST and exclude freight and insurance. See latest catalogue for freight rates. All major credit cards accepted.

SiDRADIO: an integrated using a DVB-T dongle

. . . incorporating a tuned RF preselector, an up-converter & coverage from DC to daylight

Pt.1: By JIM ROWE

Below: nearly all the parts for the SiDRADIO are mounted on a single large PCB. The DVB-T dongle plugs directly into an internal USB port and is housed together with the PCB in a low-profile instrument case.

SDR

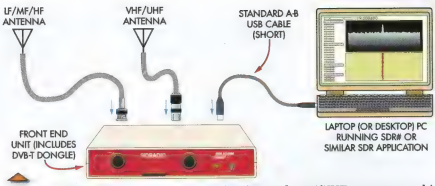

Fig.1: the SiDRADIO has inputs for LF/MF/HF and VHF/UHF antennas and is connected to a PC running SDR# (or similar) via a standard USB cable.

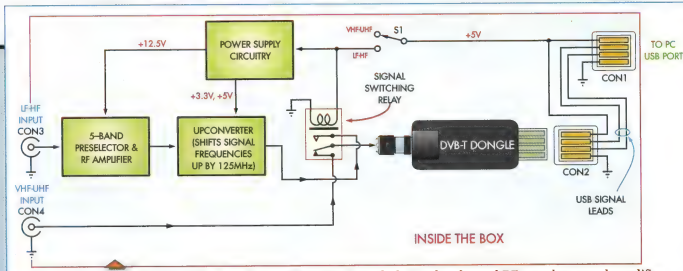

Fig.2: block diagram of the SiDRADIO. It includes a 5-band tuned RF preselector and amplifier, an up-converter and the DVB-T dongle all in one box. The up-converter shifts LF-HF signals up by 125MHz so that they can be tuned by the DVB-T dongle.

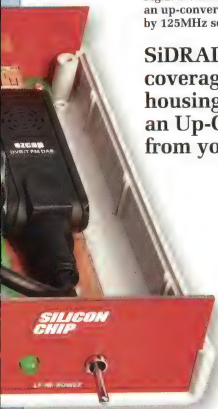

SiDRADIO is a low-cost communications receiver with coverage from 100kHz to over 2GHz. It is self-contained, housing a USB DVB-T dongle plus all the circuitry for an Up-Converter and RF preselector, and is powered from your PC via the USB cable.

IF YOU ARE JUST dipping your toe into the world of radio communications, you won't want to spend much money. However, a fully-fledged communications radio is an expensive acquisition.

Fortunately, software-defined radios have radically changed the whole communications scene. This has been further shaken up by the fact that cheap and readily available USB DVB-T dongles, normally used for watching digital TV on a personal computer, can now be configured as communications radios with a wide range of reception modes: FM, AM, SSB, CW etc. Not only that but the SDR# software provides fancy features such as spectrum analyser and waterfall displays on your PC's screen.

We first introduced this cheap and cheerful approach to a software-designed radio (SDR) in the May 2013 issue and followed it with a matching Up-Converter, to enable the DVB-T dongle to receive frequencies below about 52MHz, in the June 2013 issue. Both of these articles have created a great deal of reader interest.

Inevitably though, readers are now hankering for extra features such as band-switching and tuning, gain on

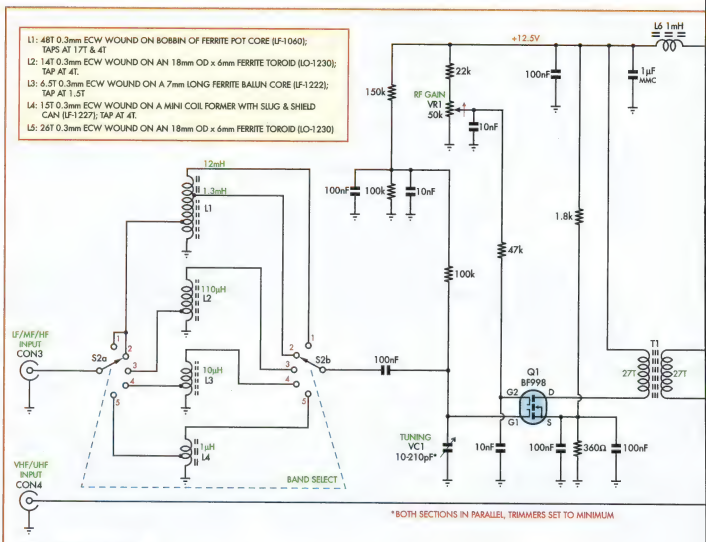

SC 2013 SiDRADIO

Fig.3: the circuit diagram of the SiDRADIO. The tuned RF front-end is based on coils L1-L4 & tuning capacitor VC1. Q1 amplifies the tuned RF signal and feeds it via T1 to the up-converter which is based on an SA612AD/01 or SA602AD/01 double-balanced mixer (IC1) and oscillator XO1. IC1 then feeds the antenna input of the DVB-T dongle via relay RLY1.

the frequency bands covered by the up-converter and ease of operation, so that you don't have to juggle input cables, supply switching and so on. So we went back to the drawing board.

We wanted to dispense with the need for a string of small boxes hooked up to the PC: the DVB-T dongle, the LF-HF up-converter and either an active antenna or an RF preamp and preselector. Plus, you also need two antennas and a power supply for the up-converter and the proposed RF preamp/preselector. This could easily end up as an untidy mess of boxes and cables hooked to your PC.

With SiDRADIO (**S**oftware **I**ntegrated & **D**efined **R**adio), we have come up with what is effectively a low-cost integrated communications receiver. It combines the DVB-T dongle (whichever one you want to use) with the LF-HF Up-Converter we described in the June issue (including its HF/VHF signal-switching relay circuit) and an RF preamp/preselector, with it all powered from the PC via a single USB cable.

The 5-band RF preamp and preselector circuit gives improved reception on the LF-HF bands from 100kHz to beyond 35MHz.

Integrated SDR concept

Fig.1 shows how SiDRADIO is connected to your computer. To cover all the available bands, you will need a VHF/UHF antenna and an LF-HF antenna and these are both connected to their respective sockets on the rear panel. Also on the rear panel is a USB socket so that you can hook it up to your laptop or desktop PC. No other cables are required, so it is very straightforward to hook it all up and then listen to the world.

On the front panel is a 5-position band switch, a thumb-operated knob for band tuning and a gain control knob. On the righthand side of the front panel is a toggle switch which allows you to switch between the two antennas via an internal relay – ie, there's no need to disconnect antennas. Our earlier Up-Converter design lacked this switch.

All of the components and circuitry for SiDRADIO are built on a double-sided PCB measuring 197 x 156mm, which is housed (along with the don-

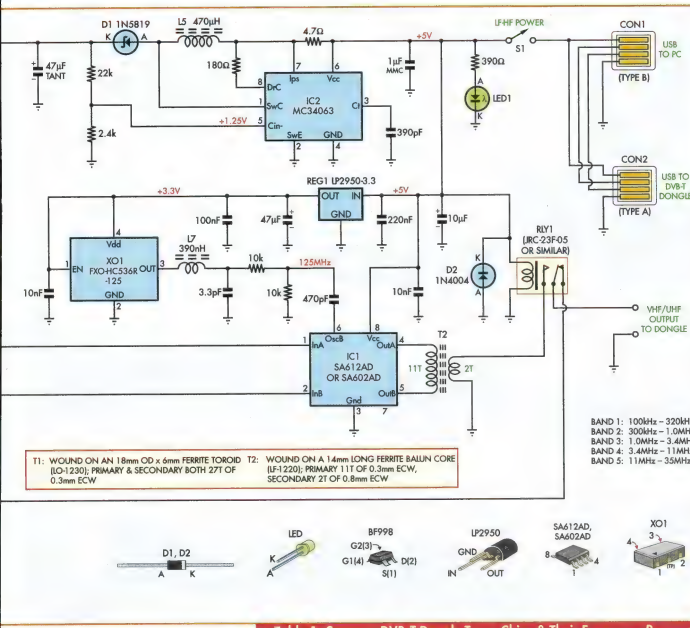

gle) in a low cost 'low profile' ABS instrument case measuring 225 x 165 x 40mm (W x D x H).

Fig.2 is the block diagram of the SiDRADIO and shows all the circuit sections, including the USB DVB-T dongle. Note switch S1 – it switches power to the circuitry and controls a relay which selects either the output signal from the up-converter or the signal from the VHF-UHF antenna.

The selected signal is fed to the USB dongle for processing and its output is fed via the USB cable to the computer. Note that the USB cable also feeds power to the circuitry.

Circuit details

The full circuit diagram of our SiDRADIO is shown in Fig.3 and if you are familiar with the previous articles in this series, you'll see that it incorporates a good deal of the circuit of the HF Up-Converter published in June 2013. The only real difference is that instead of the Up-Converter's input transformer T1 being connected directly to the LF-HF antenna input as before, it's now fed from the output of the RF preamp and preselector section. This is the circuitry on the lefthand side of Fig.3 and based around Q1, a BF998 dual-gate VHF depletion-mode MOSFET.

Q1 is configured as a standard common-source RF amplifier, with the incoming RF signals fed to gate G1 and the transistor's gain varied by adjusting the DC bias voltage applied to gate G2, using 50kΩ pot VR1. The output signal appears at Q1's drain, and is fed directly to the primary of T1.

Table 1: Common DVB-T Dongle Tuner Chips & Their Frequency Ranges

Tuner Chip	Frequency Range	DVB-T dongle model in which chip is found
Elonics E4000	52 – 2200MHz*	EzCAP EzTV668 DVB-T/FM/DAB, many current 'no name' devices
Rafael Micro R820T	24 – 1766MHz	? (not known – but may be in many future dongles)
Fitipower FC0013	22 – 1100MHz	EzCAP EzTV645 DVB-T/FM/DAB, Kaiser Baas KBA010008 TV Stick
Fitipower FC0012	22 – 948MHz	Many of the earlier DVB-T dongles

*With a gap from 1100MHz to 1250MHz (approx) NOTE: Elonics may have ceased manufacture

DVB-T tuner dongles can be purchased online quite cheaply. These three units all feature a 75-ohm Belling-Lee antenna socket but many other dongles come with a much smaller MCX connector.

Q1 therefore acts as an RF preamplifier, with VR1 able to adjust its gain from virtually zero up to approximately +20dB. It may seem strange to have a preamp whose gain can be reduced down to zero but having the gain variable over a wide range is essential to reduce overloading and cross-modulation from very strong signals.

Because Q1 performs best in this kind of circuit with a +12V DC supply, we are using a DC-DC step-up converter to derive this +12V from the +5V USB supply fed in via CON1. It's basically a simple boost converter using IC2, an MC34063, together with inductor L5 and Schottky diode D1.

The output of the converter is about +12.5V (12.2-13.2V range), as measured across the 47µF tantalum capacitor.

The DC-DC converter operates at between 50kHz to 60kHz and as a result its output voltage carries a significant amount of ripple at these frequencies. To minimise interference to the RF preamp due to harmonics of this ripple (especially on the lowest 100-320kHz band), the converter's output is filtered using RF choke L6 (1mH) and its accompanying 1µF capacitor. These form a low-pass LC filter with a corner frequency of around 5kHz.

Shielding

Also critical to the circuit's performance is the shielding we have had to provide between the converter's circuitry (especially L5) and the RF preamp and preselector circuitry. We will discuss this shielding later.

The 5-position 2-pole switch (S2a/S2b), coils L1-L4 and tuning capacitor VC1 form the preselector section of the circuit. This is connected between LF-HF antenna input connector CON3 and the preamplifier input. Coils L1-L4 are used to cover each of the five bands, with L1 tapped so that it can be used to cover both of the lower bands. Tuning within each band is then carried out using VC1.

Switch S2a connects the antenna input to the input tap on each coil, while S2b connects tuning capacitor VC1 and the preamp input to the 'top' of each coil. Note that the 'Q' of each coil is relatively modest, so the tuning of VC1 is fairly broad rather than sharp and critical. This is especially the case with coil L1.

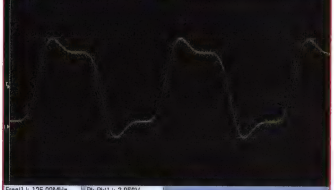

Fig.4: this scope grab shows the 125MHz signal from the crystal oscillator. This was measured using a 400MHz probe and a 350MHz scope, so many of the upper harmonics have been heavily attenuated. Even so, it can be seen that the waveform is far from sinusoidal and that's why it's followed by an LC filter to clean it up and so reduce spurious responses.

Up-converter operation

Although we discussed the operation of the up-converter circuit in July 2013, we are also providing a summary here for the benefit of those who didn't see the earlier article. The actual frequency conversion is performed by IC1, which is an SA612AD or its close relative the SA602AD. Both are double-balanced mixer devices designed specifically for this kind of use. The LF-HF signals to be up-converted enter the circuit from the RF preamp via matching transformer T1, before being fed into the balanced inputs (pins 1 & 2) of IC1.

The 125MHz signal used to 'shift' the input signals up in frequency is generated by crystal oscillator module XO1, a very small HCMOS SMD device which produces a 125MHz clock signal at its pin 3 output. The output voltage at this pin is 2.65V peak-to-peak, which is rather too high for linear operation of the mixer. In addition, it's essentially a square wave, rich in harmonics of 125MHz as well as the fundamental. You can see its output in the scope grab shown in Fig.4.

As a result, this 'squarish' 125MHz signal is fed through a low-pass filter formed by a 390nH inductor and 3.3pF capacitor, to filter out most of the harmonics. These would otherwise contribute to spurious signals via cross-modulation in the mixer. Then we reduce the filtered 125MHz signal down to a more suitable level for the mixer, via a voltage divider consisting of two 10kΩ resistors.

The signal is then fed into the oscillator input (pin 6) of IC1 via a 470pF coupling capacitor.

Inside the mixer, the balanced input signals at pins 1 & 2 are mixed with the 125MHz oscillator signal at pin 6. The resulting mixing products appear in balanced form at the outputs (pins 4 & 5).

Because IC1 is a double-balanced mixer based on a Gilbert cell, the outputs contain very little of the original input signal frequencies F_{in} or the oscillator signal frequency F_{osc}

(125MHz). Mainly they contain the 'sum' and 'difference' products, ie:

Sum product = (F_{osc} + F_{in})
Difference product = (F_{osc} - F_{in})

It's the sum product that we want. Although the difference product is also present in the outputs, the signals it contains are in a different tuning range so they can be ignored.

The balanced output signals from the mixer are passed through a second matching transformer, T2. As well as stepping them down in impedance level (1500Ω:75Ω), T2 also converts them into unbalanced form to provide better matching to the input of the DVB-T dongle.

The output signals from T2 are not taken directly to the dongle input but instead to the normally open contact of relay RLY1. It's the moving common contact of RLY1 which connects to the dongle and since the actuator coil of RLY1 is driven by the +5V supply line when switch S1 is closed, this means that the up-converter's output is only connected to the dongle when power is applied via S1. This mode is indicated by LED1 being lit.

When S1 is switched off and +5V power is not applied, the moving contact of RLY1 connects to the normally closed contact and this connects directly to the converter's VHF/UHF input connector CON4 at lower left. So when S1 is turned off to remove power from the LF-HF front-end circuitry, the input of the DVB-T dongle is connected directly to the VHF/UHF antenna, as noted above in the brief discussion of Fig.2.

IC1 and RLY1 operate directly from the nominal +5V USB rail, with diode D2 used to absorb any back-EMF spikes which may be generated by the coil of RLY1 when power is removed. Crystal oscillator module XO1 operates from +3.3V and this is derived by REG1, an LP2950-3.3 LDO (low drop-out) device in a TO-92 package.

That's about it, apart from mentioning that the DVB-T dongle is always connected to the USB port of your PC regardless of the position of S1. That's because USB connectors CON1 and CON2 are linked together. This means that providing the USB cable remains plugged into CON1 and the PC's port, the dongle is always powered up and operating.

So, effectively, S1 acts as a band-

The SDR# Application & Its Features

SDR# is an easy-to-use software application designed to turn almost any PC into a powerful SDR (software defined radio), using either a DVB-T dongle (the hardware "front end") or other devices. Here are some of its salient features:

(1) RF performance, frequency accuracy: the RF performance basically depends on the chips used in the DVB-T dongle used with SDR#. A typical dongle fitted with the Elonics E4000 tuner chip can tune from 52-1100MHz and 1250-2200MHz, with a sensitivity of approximately 1.5μV for 12dB of quieting at frequencies up to about 180MHz, rising to about 20μV for the same degree of quieting at 990MHz.

The SDR# software used with the dongle provides a "Frequency Correction" feature, whereby you can correct for any frequency error in the DVB-T dongle. In addition, there is a "Frequency Shift" feature, allowing you to display the correct frequencies even when you have an up-converter connected ahead of the dongle.

(2) Demodulation modes: AM (amplitude modulation), NFM (narrow frequency modulation), WFM (wide frequency modulation), LSB (lower sideband), USB (upper sideband), DSB (double sideband), CW-L (carrier wave with BFO on low side) and CW-U (carrier wave with BFO on high side).

In all these modes, the RF filter bandwidth can be adjusted over a wide range, while the filter type can be selected from a range of five (Hamming, Blackman, Blackman-Harris, Hann-Poisson or Youssef). The filter order can also be selected over a wide range. In both CW modes, the frequency separation of the software BFO can also be adjusted. There is adjustable squelch and also both linear and "hang" AGC.

(3) FFT spectrum display and/or Waterfall spectrum/time display: the FFT spectrum display and Waterfall display can be selected either separately or together. The windowing function used can be selected from six choices: None, Hamming, Blackman, Blackman-Harris, Hamm-Poisson or Youssef, and the display resolution can be adjusted over a wide range by changing the block size from 512 to 4,194,304, in powers of two, with the higher resolutions requiring greater processing overhead.

Good results can be achieved with the default resolution of 4096, which was used for the screen grab shown below.

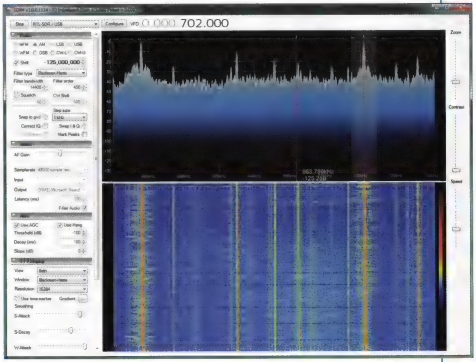

Fig.5: SDR# spectrum and waterfall displays for a 702kHz AM signal. Note that a frequency shift of 125MHz has been entered (at top right) so that the correct tuned frequency is displayed.

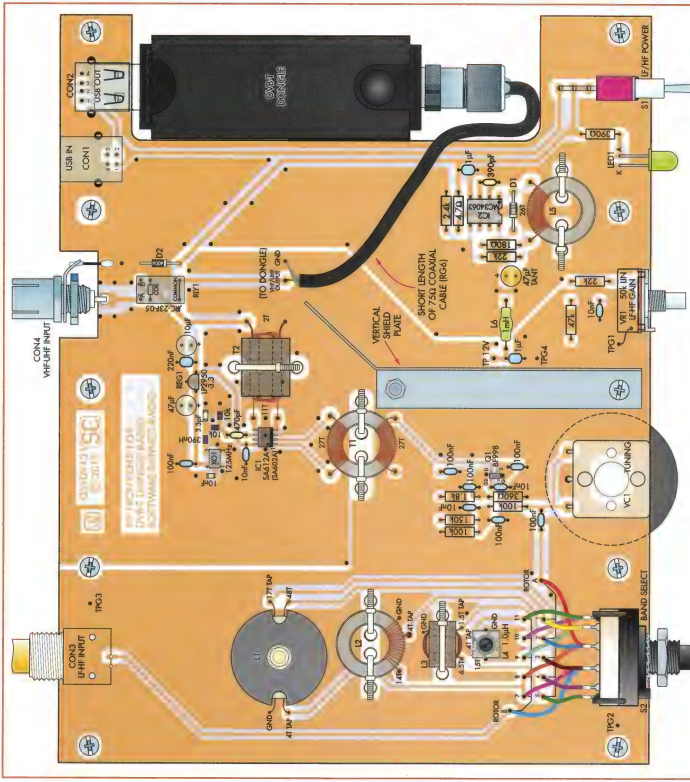

Fig.6: the parts layout & wiring diagram. Start with the SMD parts and make sure all polarised parts are correctly orientated.

select switch, with the dongle receiving LF-HF signals when S1 is in the on position and VHF/UHF signals when it is off.

Construction

All the parts except for bandswitch S2 and the VHF-UHF input connector (CON4) are mounted on a large PCB coded 06109131 and measuring 197 x 156mm. This has a cut-out area at the righthand end to provide space for the DVB-T dongle and its input connector, in order to make an integrated assembly.

As shown in the photos, the PCB/DVB-T dongle assembly fits neatly into the low-profile ABS instrument case. Rotary bandswitch S2 mounts directly on the lefthand end of the front panel, while the VHF-UHF input connector (CON4) is mounted on the rear panel with its 'rear end' protruding into a second (small) cut-out in the PCB.

Fig.6 shows the parts layout on the PCB. There are eight SMD components in all: IC1 (SA612A), crystal oscillator

This view shows the completed PCB inside the case, together with a DVB-T dongle. Note that a metal shield is fitted to the PCB, while horizontal shields are fitted to the top & bottom of the case. These shields are described next month.

module XO1, the 390nH inductor, a 3.3pF capacitor, a 10nF capacitor (alongside XO1), the two 10kΩ resistors and transistor Q1 (BF998). These parts should be installed first, starting with the five passive components and then Q1, XO1 & IC1.

You will need a fine-tipped soldering iron and a magnifier (preferably a magnifying lamp) to solder the SMD parts in. The trick is to carefully position each part on the PCB and solder just one lead to begin with, then check that the device is correctly aligned before soldering the remaining leads. If it's not correctly located, it's just a matter of re-melting the solder on the first lead and nudging the device into position.

Don't worry if you get solder bridges between IC1's pins when soldering it into position. These bridges can easily be removed using solder wick.

By the way, there are actually two versions of the BF998 MOSFET, both in the SOT-143 SMD 4-pin package – the standard BF998 and the BF998R with transposed (reversed) pin connections. Make sure you are supplied with the former and not the latter, because the PCB has been designed to suit the standard version and won't take the 'R' version. If you source the BF998 device from element14, it has the part number 1081286.

Both the SA612AD and the SA602AD mixer devices are in an SOIC-8 package and are pin compatible, so you can use either as IC1. They are made by NXP (formerly Philips) and are available from a number of suppliers including element14. Whichever one you use, just make sure you fit it with the orientation shown in Fig.6 – ie, with its bevelled long edge towards transformer T1.

Crystal oscillator module XO1 has a footprint of just 4 x 3mm. This is a Fox 'XPRESSO' FXO-HC536-125 device, also available from element14.

Its orientation is also critical; it must go in with pin 1 (indicated by a tiny arrow or 'foxhead' symbol etched into one corner of the top sealing plate) at lower left as viewed in Fig.6 (you may need a good magnifying glass to locate that symbol).

Once these are in, install the leaded passive components, starting with the resistors and moving on to the capacitors and RF choke L6. Diodes D1 & D2 can then go in, making sure that you fit the correct diode in each position and with the correct orientation

Follow with 3.3V regulator REG1, then fit the MC34063 DC-DC converter controller (IC2). Again, make sure that these parts are fitted the right way around.

Power switch S1 is next, after which you can fit the USB input and output

Main Features & Specifications

A compact 'RF front end' for a software defined radio using a laptop or desktop PC. It can incorporate virtually any of the DVB-T dongles used for SDR and couples the dongle to an up-converter for LF-HF reception, the latter effectively shifting LF-HF radio signals up by 125MHz into the VHF spectrum.

The front end also includes a signal switching relay so when power is not applied to the LF-HF preselector and up-converter circuitry, the dongle's VHF-UHF signal input is switched directly to the VHF/UHF input (this avoids the need for cable swapping). All power for both the dongle and the front-end circuitry is derived from the USB port of the PC.

VHF/UHF input impedance: 75Ω unbalanced.

Up-converter section conversion gain: approximately +10dB ±2dB over the input range 100kHz - 35MHz (corresponding output range = 125.1MHz - 180MHz).

LF-HF input impedance: 50Ω unbalanced.

Preselector bands: Band 1 = 100-320kHz; Band 2 = 300kHz-1MHz; Band 3 = 1-3.4MHz; Band 4 = 3.4-11MHz; Band 5 = 11-35MHz

RF gain: variable from zero to about +20dB, over the range 100kHz - 35MHz.

Typical effective LF-HF sensitivity: Band 1 = 20-50μV; Band 2 = 18-50μV; Band 3 = 5-12μV; Band 4 = 1.5-4μV; Band 5 = 1-2μV

VHF/UHF output impedance: 75Ω unbalanced.

Power supply: 5V DC from computer USB port.

Current drain for VHF-UHF reception (ie, dongle only): less than 70mA.

Current drain for LF-HF reception: less than 220mA.

connectors (CON1 & CON2), the LF-HF input connector (CON3) and relay RLY1. Note that RLY1 is again a very small component, measuring just 12 x 7 x 10mm (L x W x H). A JRC-23F-05 relay from Futurlec was fitted to the prototype.

Next you can fit the PCB terminal pins. There are 19 of these, 12 of which are located to the rear of S2 and one (TPG2) to the left of S2. Another TPG pin is located at upper left near CON3, while two further pins are located at centre right to terminate the RF output cable to the DVB-T dongle.

The remaining three pins are at lower centre of the PCB, two to the left of inductor L6 and one to the left of potentiometer VR1.

Fitting VC1

The next step is to fit tuning capacitor VC1. This must be spaced up from the PCB by 3.5mm, so that the tuning knob just clears the bottom of the case when the PCB is later fitted into it. Fig.7 shows the mounting details.

As can be seen, an M3 nut and a small flat washer is used as a spacer on either side. In addition, the M2.5 x 4mm mounting screws supplied with the tuning capacitor have to be replaced with M2.5 x 6mm screws, to cope with the additional length required due to the spacers.

Make sure that VC1's three connection lugs at the rear are fed through their matching pads on the PCB when it is installed. Once VC1 is secured in position, these leads are then soldered to the pads on both sides of the PCB. The tuning knob can then be fastened to the shaft using one of the supplied M2.5 x 4mm screws.

Coils & transformers

The next step is to wind transformers T1 & T2 and also coils L1-L5. We'll deal with transformer T1 and coils L2 & L5 first, since they are all wound on identical toroidal ferrite cores, each with an outside diameter of 18mm and a depth of 6mm (eg, Jaycar LO-1230 or similar).

- **Transformer T1's** primary and secondary windings both consist of 27 turns of 0.3mm ECW (enamelled copper wire) wound closely on opposite sides of the toroid (they can be temporarily secured with tape). When both windings have been made, trim the leads to about 10mm and strip off 5mm of enamel from each end.

The toroid assembly can then be mounted on the PCB and secured in place using two small Nylon cable ties as shown in Fig.6. After that, it's just a matter of soldering its four leads to the relevant pads on the PCB.

- **Coil L2** consists of a single winding of 14 turns with a tap connection at four turns, again using 0.3mm ECW. After winding the first four turns, bring the wire straight out from the toroid, then double it back after about 12mm to form the tap connection and wind on the remaining 10 turns in the same direction as the first four.

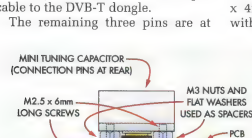

Fig.7: this diagram shows the mounting details for tuning capacitor VC1. It must be stood off the PCB by 3.5mm using M3 nuts and flat washers as spacers, so that its tuning wheel clears the bottom the case.

Fig.8: the winding details for coil L4. It's wound using 0.3mm ECW on a small RF coil former, with a tap after four turns at position 'A'. Don't forget to fit the ferrite slug.

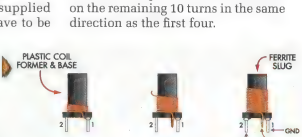

WINDING DETAILS FOR COIL L4

Software Is Crucial

The software needed to configure a DVB-T dongle and PC combination as an SDR consists of two main components: (1) a driver which allows the PC to communicate via the USB port with the Realtek RTL2832U (or similar) demodulator chip inside the dongle; and (2) application software to allow the PC to perform all the functions of an SDR in company with the SiDRADIO and its DVB-T dongle.

The driver must be installed first. The most popular driver for a DVB-T dongle with an RTL2832U demodulator chip (when used as an SDR) is the "RTLSDR" driver (nearly all dongles use the RTL2832U). The website at www.rtlsdr.org provides lots of information on this.

Once the driver has been installed, the application software can be installed. The most popular application software is SDR#, available from www.SDRSharp.com

The article on Software Defined Radio in the May 2013 issue of Silicon Chip has all the details on installing the driver and application software.

That done, trim the start and finish ends to about 10mm and strip 6mm of enamel from each end and from the tap loop. The coil can then be fitted to the PCB, secured with Nylon cable ties and the leads soldered.

- **Coil L5** can be tackled next. It simply consists of 26 turns of 0.3mm ECW, with no taps or other complications. As before, it's secured to the top of the PCB using two small cable ties.
- RF output transformer T2 is wound on a 14mm-long ferrite balun core (Jaycar LF-1220 or similar), with the winding wire passed up through one hole in the balun core and then back down through the other hole, and so on.

The secondary consists of just two turns of 0.8mm ECW and should be wound first. Then you can wind the primary, which consists of 11 turns of 0.25mm ECW. Note that the leads of the two windings emerge from opposite ends of the balun.

When you have finished both windings, trim the free wire ends to about 10mm and strip the enamel from each end. The completed balun can then be mounted on the PCB and its four wire leads soldered to their respective pads. Make sure that the balun is orientated with its 11-turn primary winding to the left and solder these wires on both sides of the PCB.

- **Coil L3** is wound on one of the smaller 6mm-long ferrite balun cores (Jaycar LF-1222 or similar). In this case, you need to wind on 6.5 turns of 0.3mm ECW with a 'loop tap' made after 1.5 turns from the start (ie, from the GND connection).

It's just a matter of winding on the first 1.5 turns, then bringing the wire out and doubling it back after about 12mm to form the tap, then winding on the remaining five turns – see Fig.6.

- **Coil L4** (band 5) is close-wound on a small RF coil former that's fitted with a ferrite tuning slug and housed in a shield can (Jaycar LF-1227 or similar). Although this coil only has 15 turns of 0.3mm ECW with a loop tap, it's a bit fiddly to wind because of the former's small size and because the former has only two termination pins.

Fig.8 shows the winding details for L4. The 'loop tap' is formed just after four turns from the start/GND end (pin 1) and is fed down through one of the small slots (A) in the former's base, so that it can subsequently be fed through its matching hole in the PCB. Again, make this 'loop tap' about 12mm long, then wind on the remaining 11 turns and terminate the wire on pin 2.

That done, screw the supplied ferrite slug into the former, along with the small piece of rubber thread supplied to act as a 'hold tight'. You should then scrape the insulating enamel from the 'tap loop' so that it's ready for soldering.

The completed coil assembly can now be mounted on the PCB (just below coil L3). Orientate it as shown on Fig.6, so that the two pins and the 'tap loop' each go through their matching PCB holes (ie, pin 1 GND at bottom right, 4T tap at top). Once it's in place, solder the three connections underneath the PCB, making sure that you get a good solder joint to both of the tap loop wires.

The next step is to gently screw down the ferrite slug inside L4 using a Nylon alignment tool until it just touches the surface of the PCB. That done, slip the metal shield can over the completed coil former, until its two attachment lugs pass down through the holes provided on each side. These

Capacitor Codes

Value	µF Value	IEC Code	EIA Code
1µF	1µF	1u0	105
220nF	0.22µF	220n	224
100nF	0.1µF	100n	104
10nF	0.01µF	10n	103
470pF	NA	470p	471
390pF	NA	390p	391
3.3pF	NA	3p3	3.3

Table 1: Resistor Colour Codes

❑	No.	Value	4-Band Code (1%)	5-Band Code (1%)
❑	1	150kΩ	brown green yellow brown	brown green black orange brown
❑	2	100kΩ	brown black yellow brown	brown black black orange brown
❑	1	47kΩ	yellow violet orange brown	yellow violet black red brown
❑	2	22kΩ	red red orange brown	red red black red brown
❑	2	10kΩ	brown black orange brown	brown black black red brown
❑	1	2.4kΩ	red yellow red brown	red yellow black brown brown
❑	1	1.8kΩ	brown grey red brown	brown grey black brown brown
❑	1	390Ω	orange white brown brown	orange white black black brown
❑	1	360Ω	orange blue brown brown	orange blue black black brown
❑	1	180Ω	brown grey brown brown	brown grey black black brown
❑	1	4.7Ω	yellow violet gold brown	yellow violet black silver brown

Parts List For SiDRADIO

1 low profile ABS instrument case, 225 x 165 x 40mm (Jaycar HB-5972 or similar)
1 double-sided PCB, code 06109131, 197 x 156mm
1 set of front & rear PCB panels, code 06109132 & 06109133 (200 x 30mm)
1 DVB-T dongle (using an RTL2832U decoder chip and either the R820T, E4000 or FC0013 tuner chips)
1 short length of 75Ω coaxial cable, with plug to suit RF input of dongle
1 HCMOS 3.3V crystal oscillator module, 125MHz (Fox Electronics FXO-HC536-125 or similar, element14 2058072) (XO1)
1 SPDT 5V mini DIP relay, JRC-23F-05 or similar (Futurlec) (RLY1)
1 SPDT PCB-mount vertical acting toggle switch (S1) (Altronics S1320)
1 2-pole 5/6-position rotary switch (S2)
1 USB type B socket, horizontal PCB-mount (CON1)
1 USB type A socket, horizontal PCB-mount (CON2)
1 BNC socket, PCB mount (CON3)
1 PAL (Belling-Lee) socket, panel-mount (CON4)
2 instrument knobs, 20mm diameter x 18mm deep (Jaycar HK-7786 or similar)
3 toroidal ferrite cores, 18mm diameter x 6mm deep (Jaycar LO-1230 or similar)
1 6mm-long ferrite balun core (Jaycar LF-1222 or similar)
1 14mm-long ferrite balun core (Jaycar LF-1220 or similar)
8 small Nylon cable ties
1 mini RF coil former with slug and shield can (Jaycar LF-1227 or similar)
1 pair of ferrite pot core halves with bobbin (Jaycar LF-1060 + LF1062)
1 50kΩ linear pot, 16mm (VR1)
1 miniature PCB-mount tuning capacitor with knob & mounting screws (VC1) (Jaycar RV-5728 or similar)
1 M3 x 25mm Nylon machine screw
1 M3 Nylon nut
2 M3 flat Nylon washers
19 PCB pins, 1mm diameter
1 1mH axial RF choke/inductor (L6)
1 390nH SMD inductor, 0805 (L7)
2 M2.5 x 6mm machine screws
10 6mm-long No.4 self-tapping screws
1 M3 x 6mm machine screw
1 M3 spring lockwasher
3 M3 nuts
2 M3 flat washers
1 90 x 36 x 0.8mm aluminium sheet or tinplate (to make vertical shield)
1 rectangular piece of blank PCB, 195 x 150mm (for top horizontal shield)
1 196 x 134 x 0.25mm copper foil or tinplate (for bottom horizontal shield)
1 200mm-length 0.25mm-dia, ECW
1 1m-length 0.3mm-dia. ECW
1 100mm-length 0.8mm-dia. ECW
Tinned copper wire, hook-up wire, etc

Semiconductors

1 SA612AD/01 or SA602AD/01 double balanced mixer (IC1) (element14 2212081 or 2212077)
1 MC34063 DC-DC converter (IC2)
1 BF998 dual-gate VHF MOSFET (Q1) (element14 1081286)
1 LP2950-3.3 or LM2936-3.3 LDO regulator (REG1)
1 5mm green LED (LED1)
1 1N5819 Schottky diode (D1)
1 1N4004 silicon diode (D2)

Capacitors

1 47μF 10V RB electrolytic
1 47μF 16V tantalum
1 10μF 16V RB electrolytic
2 1μF MMC
1 220nF MMC
5 100nF MMC
5 10nF MMC
1 10nF SMD ceramic (1206)
1 470pF disc ceramic
1 390pF disc ceramic
1 3.3pF C0G/NP0 SMD ceramic (1206)

Resistors (0.25W, 1%)

1 150kΩ	1 1.8kΩ
2 100kΩ	1 390Ω
1 47kΩ	1 360Ω
2 22kΩ	1 180Ω
2 10kΩ SMD (0805)	1 4.7Ω 0.5W
1 2.4kΩ	

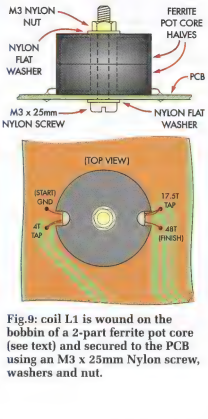

Fig.9: coil L1 is wound on the bobbin of a 2-part ferrite pot core (see text) and secured to the PCB using an M3 x 25mm Nylon screw, washers and nut.

are then soldered to their pads on the underside of the PCB to secure the can in place.

Winding coil L1

The remaining coil to be wound is L1 – see Fig.9. It's wound on the bobbin of a 2-section ferrite pot core assembly measuring 25mm in diameter and 16.5mm high (Jaycar LF-1060 + LF1062).

This coil is wound in a conventional fashion directly on the bobbin and consists of 48 turns of 0.3mm ECW with two tapping loops. The winding procedure is as follows.

First, anchor the 'start' end of the wire to one side of the bobbin using cellulose tape. That done, close-wind four turns onto the bobbin, then bring out a loop of wire to form the antenna 'tap' via the same slot in the bobbin's side that was used for the 'start' lead. Anchor this loop tap to the side of the bobbin with another small piece of cellulose tape, then close-wind on 13.5 more turns in the same direction as the first four turns.

After winding on these extra turns, bring out another tap loop through the slot in the opposite side of the bobbin (ie, opposite the 'start' and '4T tap' wires). Anchor this loop to the outside of the bobbin using cellulose tape, then

Performance Limitations

While the combination of a DVB-T dongle with an up-converter and an HF preamp and preselector – as provided by the SiDRADIO – can provide many of the operating features of a high-performance communications receiver, it's unrealistic to expect exactly the same performance. The high cost of communications receivers is the price you pay for superb sensitivity and selectivity, FM quieting, excellent image rejection and so on. You are not going to get that sort of performance from a set-up costing a great deal less.

Apart from anything else, most DVB-T dongles are in a plastic case that provides no shielding against the ingress of strong VHF signals like those from FM stations and DAB+ stations – or from the PC you're using with the SDR front end. So even though we have taken a great deal of care to provide shielding for both the dongle and the rest of the front end circuitry, you're still likely to find spurious 'breakthrough' signals in that part of the VHF spectrum into which the up-converter shifts the incoming HF signals. Having said that, the shielding does significantly reduce breakthrough compared to an unshielded dongle.

Another reason why you'll tend to find spurious signals is that the simple input tuning circuitry of the preselector section is inevitably rather modest in terms of selectivity. So although the new unit does provide improved rejection of interfering signals compared with the June 2013 "LF-HF To VHF Up-Converter" with its broadband input, it's still not in the same league as a high-performance HF communications receiver.

In spite of that, it's surprising what results you can get out of this new all-in-one SDR interface, particularly if you team it up with a long-wire HF antenna or an active indoor HF loop antenna with its own low-Q tuning circuit.

wind on a further 13 turns to fill this first winding layer.

Next, apply a narrow strip (9-10mm wide) of cellulose tape over this layer to hold it all in place, then continue winding in the same direction to produce a second layer of 18 turns.

When the last turn has been wound on, bring the wire end out through the same bobbin slot as the '17.5T tapping loop' and cut it off about 10mm from the bobbin. This lead becomes the 48-turn 'top' of coil L1. Another narrow strip of cellulose tape is then placed over the second layer to hold everything in place.

With the windings completed, the next step is to scrape off about 5mm of enamel insulation from the ends of all four coil connections. That done, place the bobbin inside one half of the ferrite pot core and fit the assembly to the PCB as shown in Fig.9, with each wire or loop connection fed into its matching PCB hole.

The top half of the pot core is then fitted in position and the entire coil assembly secured to the PCB using an M3 x 25mm Nylon machine screw, two Nylon flat washers and an M3 Nylon nut. Note that the screw should be passed up through the PCB from underneath, as shown in Fig.9.

Finally, solder the various leads running from L1 to the PCB pads on both sides of the board.

Completing the PCB assembly

The PCB assembly can now be completed (apart from its central shield) by fitting VR1 and LED1. Before fitting VR1, cut its shaft to a length of about 9mm and remove any burrs. VR1 can then be soldered into position, after which a short length of tinned copper wire is used to connect the pot's metal shield can to the earth copper of the PCB, via earth terminal pin TPG1.

Note that you may have to scrape away the passivation from a small area of the pot's metal shield and apply some flux in order to achieve a good solder joint. You will also need a really hot soldering iron.

LED1 is mounted vertically with 20mm lead lengths (use a cardboard spacer). Be sure to orientate it with its anode lead (A) to the right. Once it's in place, bend its leads forward by 90° about 8mm above the PCB so that it will later protrude through its matching hole in the front panel.

The next step is to make the central shield for the PCB plus top and bottom horizontal shields to ensure good performance. We'll detail these shields and complete the construction in Pt.2 next month. SC

OCEAN CONTROLS

Helping to put you in Control

LED Power Supply
40 W, IP67 power supply with Australian standard plug on 1.8 m lead. Designed to work as constant voltage or constant current for driving LEDs. Cooling by free air convection. 12 VDC output at up to 3.33 A. Other models are also available.
SKU:PSL-0412 Price: $106.20+GST

Ultrasonic Range Finder
5 m range, narrow beam-width, IP67 ultrasonic range-finder with 1 mm resolution and filtering tuned to detect snow depth levels. Analog voltage, pulse width and TTL serial outputs. 2.7-5.5 VDC powered. Matches 3/4" PVC pipe fittings. RoHS compliant.
SKU:MXS-114 Price:$159.95+GST

Mini PLC - Arduino Compatible
Fitted with Ethernet, USB & RS-485 interfaces, our new controller features; 8 relay outputs, 4 opto-isolated inputs and 3x 4-20 mA or 0-5 VDC analog inputs. Windows, Mac OS X and Linux compatible. Accepts XBee form factor expansion boards. 12/24 VDC powered. DIN rail mountable.
SKU:KTA-323 Price:$185.00+GST

Universal Double Level Terminal
SKJ universal DIN rail double level Screw terminal offers a wire section of 4 mm2 with 4 side cable entry. Rated to 1000 V @ 41 A. Can be mounted on standard hat type railway Other sizes are also available
SKU:TRM-011 Price:$1.69+GST

Ambient Light Sensor
4 to 20 mA loop powered ambient light sensor. Screw terminal connec-tions. Housed in IP65 rated enclosure
SKU:KTA-274 Price:$99+GST

Bipolar Stepper Motor
4-wire NEMA34 industrial grade stepper motor, ideal for driving heavier loads. Has a holding torque of 122 kg.cm (11.96 Nm or 1694 oz-in). Front and rear shafts. Other bipolar stepper motors are also available.
SKU:MOT-135 Price: $179.00 + GST

AM882 Stepper Motor Drive
Fully digital microstepping stepper motor driver with anti-resonance tuning and sensor-less stall detection. 20 to 80 VDC powered with current output of 0.1 to 5.86 A RMS. Automatic/PC tuning via free Pro-tuner software. Over-voltage/current & phase-error protections.
SKU:SMC-011 Price: $159.00 + GST

For OEM/Wholesale prices
Contact Ocean Controls
Ph: (03) 9782 5882
oceancontrols.com.au

You won't believe how good they sound . . . and your friends won't believe you built them!

"Tiny Tim" Horn Loaded Speaker System

This low-cost speaker system uses a single 4-inch driver to give surprisingly good bass and treble response. It is quite efficient and only needs a low power amplifier to give excellent sound levels.

This speaker system turns heads, not only because it looks quite different from the speaker systems you may be used to but more importantly because it sounds so impressive.

It does not use bulky and expensive eight, ten or twelve-inch drivers and there are no tweeters or crossovers.

Instead, the single driver in each box is a four-inch model, which costs as little as $25.00. Add some pieces cut from a sheet of plywood, which costs perhaps $70, some glue and a few hours of construction time and you'll have a speaker system which easily competes with much-higher-priced commercial units on the market today. And yes we know that there are quite a number of tower and mini-tower speakers on the market right now, many with multiple drivers and all sorts of claims. Quite simply, we believe these are better than anything we've heard recently at anything like the price!

By Allan Linton-Smith and Ross Tester

The secret to such a high-performing speaker is in the design of the cabinet. Unlike the simple bass-reflex or other ported designs you're used to, these

are actually rear-loaded horns. They look difficult to build but providing you're accurate with your woodwork (or you use someone who is!) they are surprisingly simple to put together.

The drivers

You have a choice of 4-inch drivers for this design. The cabinets are perfectly matched to – and in fact were originally specifically designed for the high-performing Fostex FE103EN models.

But we tried a couple of locally-available drivers: the Altronics C0626 and Jaycar CS-2310 models, which are significantly cheaper than the Fostex. And while they might not perform *quite* to the level of the Fostex drivers, most people would be very happy with the cheaper approach.

Having said that, several of the SILICON CHIP staff commented that they thought enclosures fitted with the Altronics drivers actually sounded the best!

While the Fostex is a single cone driver, the Altronics C0626 is a twin-cone model and the Jaycar is a coaxial unit with separate miniature tweeter fed by a bipolar electrolytic capacitor.

The first two speakers have the advantage of simplicity and there is no problem with phase shift in a crossover network, albeit even the simple crossover capacitor of the Jaycar unit.

All three drivers have the advantage of using a single driver with its phase coherency over a wide range of frequencies. This helps in the realistic reproduction of voice, instruments or complex orchestration and in accurate sound staging or positioning of each instrument.

Just a note about the Jaycar CS-2310, it's intended as a car speaker and its nominal impedance is 4Ω so you will need to make sure your amplifier can handle this low impedance (fortunately these days, most can). The Fostex and Altronics drivers are both 8Ω.

So which to choose?

If you're looking for "most bang for your buck" the Altronics would be a good choice because they are the most efficient (95dB/W @ 1m) vs 89dB for the Fostex and 83dB for the Jaycar unit. Offsetting that lower efficiency is the fact that the Jaycar driver will actually receive twice as much power as the other two (because it has half the impedance) for a given volume setting from the amplifier. This will mean that the difference in efficiency will be less apparent than the raw figures might indicate.

The Altronics and Jaycars are similarly priced, at about $30 pair for the Altronics vs $25 for the Jaycars but you'll pay much more for the Fostex drivers. You can compare the three drivers in the spec table below.

The cabinet design

The enclosure design for this speaker (which you can download at www.fostexinternational.com/docs/speaker_components/pdf/FE103En.pdf) can be regarded as a cross between a bass reflex vented enclosure and a horn-loaded enclosure. Horn-loading can be thought of as an efficient means of coupling between the relatively heavy mass of the speaker to the much lighter mass of air.

Horns have been used for a very long time. For example, they have been used for centuries in musical instruments and as megaphones – the very first horn speaker. And of course, all the early wireless sets and gramophones used a horn-loaded speaker. In all of these early examples, efficiency was paramount.

The tower speaker we are using here uses the 4-inch driver as a direct radiator for the upper frequencies and a horn radiator for the lower frequencies. The internal construction of the tower is actually a folded horn with each section being longer and larger in cross-section, to approximate the exponential taper of an ideal horn.

While efficiency is a big advantage of a horn speaker system, they do not necessarily result in the smoothest bass response. However, in our case where we are using tiny drivers, we get a much more extended bass response than could normally be expected with their relatively high free-air cone resonances.

Anyone who is reasonably competent in woodworking and has a selection of suitable tools should be capable of putting these cabinets together.

In fact, we fully expect these speakers to become the "project of choice" for many students in their Higher

MANUFACTURER'S SPECIFICATIONS	Fostex FE103En	Altronics C0626	Jaycar CS-2310
Price per pair ($ approx)	150	34	25
Voice coil dia (mm)	20	-	-
Impedance (ohms)	8	8	4
SPL (dB/W@1m)	89	95	83
Rated input (W)	5 to 15	8 to 15	15
Magnet	ferrite	ferrite	ferrite
Magnet wt (grams)	193	-	-
Net wt (grams)	580	-	-
Baffle hole dia (mm)	93	93	93
Cone area (sq m)	0.005	-	-
R_e (ohms)	7.5	-	-
Free air Resonance (Hz)	83	120	122
VC inductance (mH)	0.0398	-	-
Q_{ms}	2.747	-	4.28
Q_{es}	0.377	-	1.88
Q_{ts}	0.33	-	1.31
M_{ms}	2.55g	-	-
V_{as} (Litres)	5.95	-	3.31
X_{max} mm	0.6	-	-
Frequency response	83-22kHz	120-20kHz	90-18kHz
MEASURED RESPONSE			
Frequency response ±5dB	60-15kHz	70-15kHz	-
Distortion (THD+N) [1kHz 90dB]	0.45%	0.65%	-
Sound Pressure Level 1kHz 1watt/1m (dB)	92.65	89.97	-

The enclosures are designed for the Fostex FE103En drivers but we've found the much-cheaper Altronics C0626 or Jaycar CS-2310 do an admirable job as well: in fact, some of our staff members commented they sound better!

School Certificate design and technology courses: do the cutting, assembly and finishing in the woodwork room, mount the speakers and wire them in the technology or electronics classes – and best of all they won't break the bank. And after they earn top marks, they'd have speakers Mum and Dad would be proud to put in the lounge room!

Plywood is a must!

The pieces for both boxes can be cut from one and a half sheets of 15mm plywood (1220 x 2440mm and 1220 x 1220mm). In fact, with care you'll get all bar one small piece (no.7) from one sheet. See Fig.1: it shows how the pieces are cut – the first cut needs to be made where shown.

The missing piece, (235 x 150mm), could even be cut from scrap as it is internal and won't be seen.

Note that this cutting diagram does assume an "imperial" size sheet; some suppliers have taken to making their sheets 2400 x 1200 – this size is not quite large enough as it cannot make allowance for the saw cuts. Your supplier should be able to advise you of the exact size of their sheets. If they are 2400 x 1200, you'll definitely need a second (half) sheet.

We used good quality Aspen Birch veneer because of its fine grain and appearance but you can choose the finish to match your décor. You *could* use plain plywood, sand it smooth and paint or stain it to your tastes.

Note that we **DO NOT** recommend the more commonly available MDF because it is 16mm thick – the extra 1mm will decrease the width of the "horn" by a cumulative 6mm and will drastically affect performance.

You will note from the photos and diagrams that the horns are built up by layers of plywood pieces. It is absolutely vital that these pieces are very accurately cut to size. If you don't have either the equipment or the skills to cut to close tolerances (to the millimetre!) we suggest you approach a local kitchen cabinet maker – most will do it for a reasonable cost; indeed, many will be

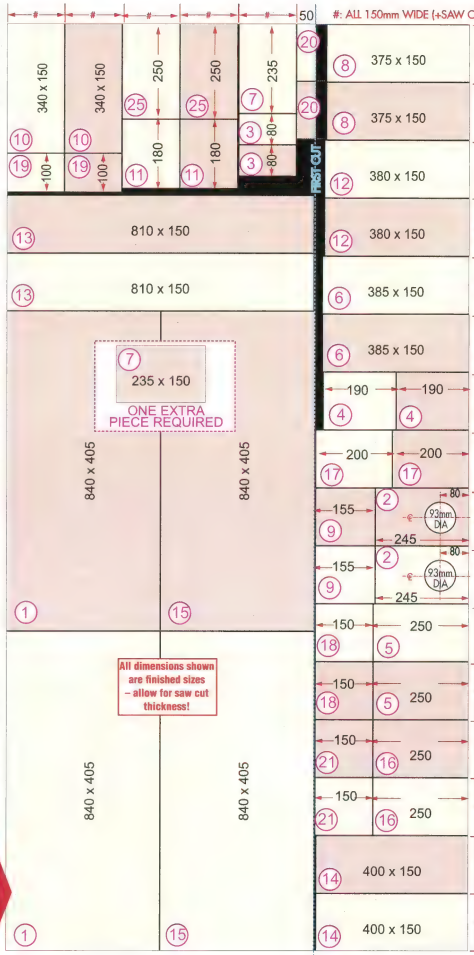

Fig.1: it's a tight fit but all except one piece (one of the "7s") can be cut from a sheet of 1220 x 2440 x 15mm ply. This assumes a saw cut thickness of 2.5mm, about normal for a kitchen cupboard maker. Note where the first and second cuts are made. The lemon coloured pieces are for box 1, pink for box 2.

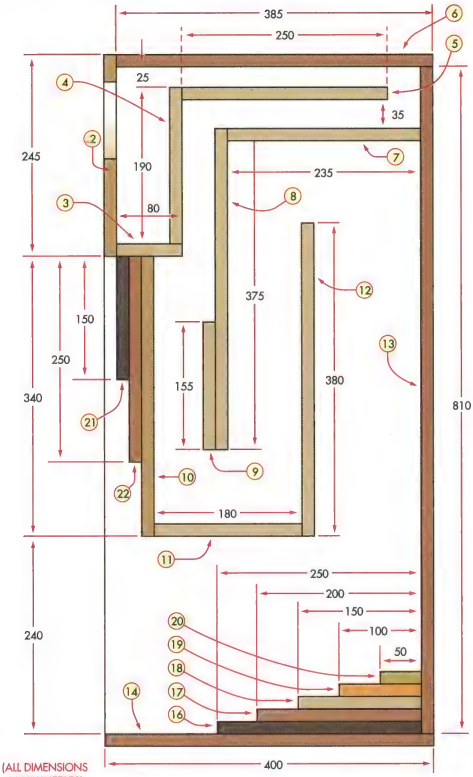

Fig.2: looking down on the right side, without the side panels, here's how all the pieces glue together to form the loaded horn. The photographs later in this article will help explain how it all goes together.

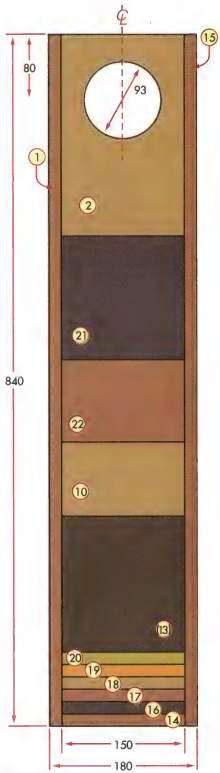

Fig.3: and here's the front-on view with the side panels fitted. Piece 13 is actually the rear panel.

able to supply the veneered plywood as well. Just don't let them talk you into MDF (a lot of kitchen cabinets are made from the stuff these days!).

Incidentally, we investigated a major hardware chain offering a cutting service and found them unacceptable for two reasons: first, they guaranteed a tolerance of no better than 5mm – useless as far as this project was concerned and second, they only had "construction grade" 15mm ply.

Now that would be OK if you only wanted a painted surface but even then, a fair amount of sanding and finishing would be required. Also, they only had full "metric" sheets (2400 x 1200mm) in stock and, as expected, they tried to talk us into MDF, which did come in half sheets!

It may be that in time, some of the kit suppliers will produce a full kit of parts – keep an eye on their advertisements in SILICON CHIP.

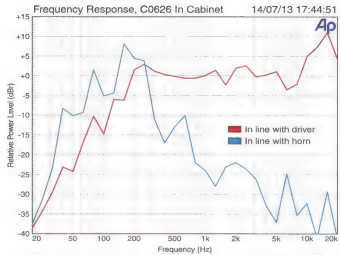

Fig.4: frequency response plots of the Altronics drivers in the horn-loaded cabinet. The red trace is the on-axis flat response and blue trace shows the output from the mouth of the horn section.

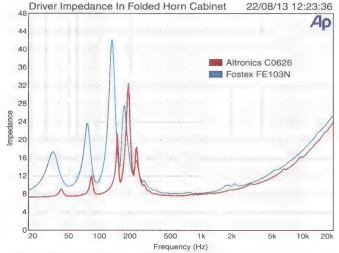

Fig.5: impedance curves of the Altronics and Fostex drivers, with multiple peaks resulting from the horn loading. This is partly a result of the much higher loading to the rear of the driver's cone.

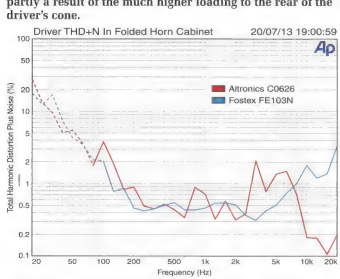

Fig.6: harmonic distortion of the Altronics and Fostex drivers. Note that the distortion of both drivers is quite low over much of the audible range but rises at the low end, partly as result of the horn loading.

The amplifier

Another feature of these speakers is their ability to handle a range of amplifiers. While they're ideally suited to lower-power amplifiers (again, that "schoolies" market springs to mind), they can handle more, with sound output to match. All three speaker drivers mentioned above are rated at 15W maximum input so you certainly *cannot* run them flat out from a high power amplifier.

We've run them from amplifiers as low as 5W output (eg, "The Champion" from January 2013) and we've run them (judiciously!) from the much higher power Ultra LD MK3 (July-September 2011).

However, even running from The Champion they certainly filled the large SILICON CHIP warehouse with sound!

Performance

We tried these with all three speaker drivers mentioned above. As you might expect, the Fostex drivers gave the best bass response – but you do pay for it! The others were surprisingly beefy!

Fig.4 shows two frequency response plots of the Altronics drivers in the horn-loaded cabinet. The red trace was taken with the microphone on axis and very close to the tweeter cone of the driver and it shows a reasonably flat response to 10kHz and rising to a peak at around 18kHz. The blue trace was taken with a microphone adjacent to the horn section and it measures the augmenting effect of the horn loading.

As you can see, the response is quite well maintained to below 60Hz (quite similar to the much more expensive Fostex drivers). Generally speaking, at distances of over 2m, the response will be a combination of the two cuves.

Fig.5 shows the impedance curves of the Altronics and Fostex drivers. These are quite different to the equivalent curves you would see with the drivers in a bass reflex enclosure which normally shows two impedance peaks in the low frequency region. The horn loading results in multiple peaks and this is partly a result of the much higher loading to the rear of the driver's cone. It also results in better bass, as shown by Fig.4.

Fig.6 shows the harmonic distortion of the Altronics and Fostex drivers and again the cheaper Altronics driver gives a good account of itself. Note that the distortion is quite low over much of the audible range but rises at the low end, partly as result of the horn loading and also the fact that the fundamental output drops markedly at very low frequencies.

Building the speakers

We have simplified each step so you shouldn't have any problems. Build one speaker box at a time otherwise mistakes are much more likely; do not rush things and make sure you understand each step before diving in!

Again, we must emphasise the need for accuracy in cutting out the panels. Using a hand-held saw of any description will usually result in errors and out-of-square cuts which will inevitably lead to air leaks or malfitting panels. The panels are butt-glued so squareness is next to Godliness! To this end, wipe up any glue excess as you go.

And to ensure perfect alignment, the enclosures need to be assembled on a completely flat surface – a work bench is fine if it is flat and stable; otherwise a (say) concrete floor with some single newspaper sheets spread on it.

Putting them together

Step i: We are assuming you already have all your pieces accurately cut out. Number each piece as shown on the diagram – use "Post-It Notes" or similar to avoid leaving glue – in any case stick them to the "bad" side of the plywood (ie, not the face side).

Step ii: Using the diagram (Fig.2) as a guide, on one of the side panels (piece 1) use a pencil on the "bad" side to mark out where all the pieces are going to go.

Step iii: Take pieces 2 and 3 and first check their dimensions to make sure you have the right ones – we're about to glue them together and once stuck, you won't be able to get them apart. Use 2 or 3 small nails or panel pins to tack them together, then prise them apart without bending the nails and run a 3mm bead of glue* along the join. Push the nails back into the holes and gently tap them with a hammer until you are happy with the fit. Wipe off any excess glue with a damp rag.

If for some reason they haven't ended up where they should, light tapping with the hammer should get them right. You have about 10 minutes to move things around before the glue sets.

Clamps or a vice should be used to hold the pieces together to give a really good bond – the glued pieces should be ready to remove after about half an hour.

Take the completed pieces and place them on the side panel where they will go – but don't glue them in place just yet.

* We used a caulking gun and "Parfix Maxi Nails Fast" water-based construction adhesive, which will bond wood to just about anything. It's cheap ($3.95 for a caulking gun tube at our local hardware store), it sets quickly (about 20 minutes) but gives up to 10 minutes or so of "fiddle time" before the glue gets too tacky. This glue (or several other bonding adhesives) are available from most hardware outlets. NOTE: PVA wood glue is not recommended.

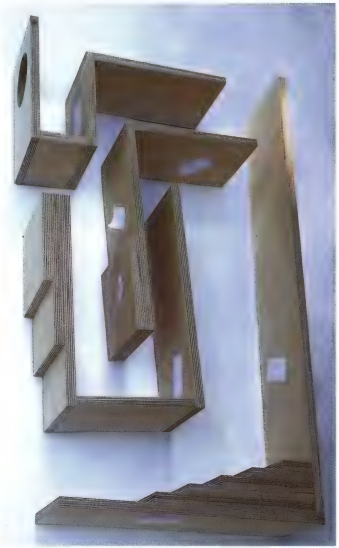

Lay out all the pieces on a flat surface so you understand how they all go together. Note the identifying "post-it" notes.

Now we've glued all the pieces together and when dry, have then glued them in position on the left-side panel.

Step iv: Repeat step iii for pieces 4 and 5.

Step v: Glue pieces 2 & 3, and 4 & 5, together

Step vi: Glue pieces 21, 22 & 10 together, using a square to ensure that the end is perfectly flat. Allow them to set for an hour o then glue them to the pieces you made in step v. (They glue to piece 3).

Step vii: Now glue pieces 11 & 12 together, allow to set for an hour, then glue those to the pieces in step vi (they glue to piece 10

Step viii: Glue pieces 7, 8 & 9 together and set aside to dry.

Step ix: Fit the input (banana) binding posts to piece 13 – drill two 3.5mm holes 50mm down from the top and 25mm apart.

Step x: Now glue pieces 16, 17, 18, 19 & 20 together.

Step xi: Glue pieces 6 & 13 together, using the side panel to keep them square while they set.

Step xii: Glue pieces 13 & 14 together, again using the side panel to keep them square while they set.

Step xiii: Now glue all the pieces together from step x, to pieces 13 and 14.

Step xiv: Once all of the glue has set, you now should have everything ready to be glued to the side panel. Place all pieces accurately in position on the side panel.

Use small panel pins and clamps to hold your speakers together while the glue is setting. Any blemishes can be smoothed over later.

Here's the completed speaker box once the glue has dried. All that remains is a bit of tidying up, finishing the veneer with your desired stain or paint and then fitting the 4-inch speaker.

And here it is with a clear polyurethane finish. This shot of the rear of the speaker (from the top) also shows the input terminals in place. You can see how the rear panel and top are inset 5mm from the rear edge of the side panels.

Step xv: Glue all those pieces in place. By now you should have a pretty good idea how much glue is used so you shouldn't have too much excess. If you do, don't waste time wiping it away - remember, you only have about 10-20 minutes before the glue sets so you need to work fairly fast.

Step xvi: When everything is in place, take the other side panel (piece 15) and without applying any glue, place it on top of the whole assembly with some weights on top. If you have worked fast enough, the glue should still be wet enough so that you can move any pieces that need to be adjusted so they are flush with the side panel. It's most important that the front of the cabinet is flush to the side because that's the part that you see. Adjust it first, then the back if you have time (you won't see the back!).

Step xvii: When the glue has dried, solder a 300mm length of figure-8 cable to the input terminals. Remember which is to the red and which is to the black (normally, stripe goes to – or black). Hang the other end of this wire out the front speaker hole.

Step xviii: It's time to complete the enclosure. Add a bead of glue to all the edges and place the side panel in place, adjusting it again so that the front is aligned to the sides. Put the weights back on and wait until it dries.

Hopefully, you will have done it all correctly. . . now you get to do it all again with the second enclosure!

Finishing off

You can now carefully sand off any rough edges or dags of glue then stain, coat or paint your enclosures as you desire. We simply applied a coat of clear polyurethane to the timber as the Aspen Birch veneer really shines with this treatment.

But remember that paint hides a multitude of sins if you have made any "oopses" along the way.

When the cabinets are completely dry, cut two 150mm x 245mm pieces of cellulose wool (often sold under the brand-name "Innerbond") and place them loosely behind the speaker area – but do not block the entry to the horn. We found that any packing in the horn reduced the bass by half (6dB) but the little packing behind the speaker had no effect on the bass. However, it did reduce the "hollow" sound at mid frequencies, caused by standing waves and reflections.

Fit the speaker drivers to the boxes, making sure you get the phasing (ie + and – connections) the same on both boxes. As a final check, briefly connect a 1.5V battery to the input terminals (+ to red, – to black) and watch the cone. Both speakers should move the same direction when connected the same way.

The drivers should have some form of gasket between them and the woodwork to ensure a seal. We wouldn't use silicone sealant – it works really well but makes the speaker incredibly difficult to remove intact if you have to remove it for any reason. A large "O" ring is ideal; at a pinch you could even use a large elastic band. Just make sure it seals all the way around as you tighten the four screws.-

If you use the Jaycar drivers, fit the grilles over the front of each speaker. Of course, you can buy grilles to fit the Altronics or Fostex speakers. Grilles are almost mandatory if you have young people with prying fingers around: that speaker height is just about perfect.

Training the speakers

What's this? Training speakers? Believe it or not, all speaker drivers "straight out of the box" are a little stiff and benefit from being "run in". We allowed about two hours of continual music at reasonable volume before we were satisfied that ours were nice and mellow. You will certainly note a significant improvement over time, particularly in the bass response. SC

PRODUCT SHOWCASE

"Value Instruments" range from Rohde & Schwarz

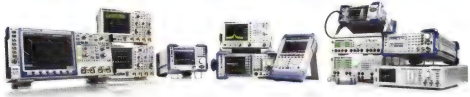

Rohde & Schwarz and its HAMEG Instruments subsidiary now market a range of favourably-priced test and measurement equipment bearing the new joint "Value Instruments by Rohde & Schwarz" label.

In addition to spectrum analysers and oscilloscopes, the Value Instruments portfolio includes EMC (electromagnetic compatibility) precompliance products as well as power supplies from Rohde & Schwarz and its HAMEG Instruments subsidiary.

The Value Instruments range is the premium provider's way of addressing those users from medium-sized companies who in the past found Rohde & Schwarz products too expensive.

The instruments are available through the existing direct sales network, authorised distributors as well as the R&S Surf-In webstore available in certain countries.

Contact:
Rohde & Schwarz Australia Pty Ltd
Unit 2, 75 Epping Rd, North Ryde NSW 2113
Tel: (02) 8874 5103 **Fax:** (02) 8874 5199
Website: www.rohde-schwarz.com.au

World's thinnest Android Smartphone

It might not be a name you'd instantly recognise but online electronics specialists BecexTech have released what they claim is the thinnest Android smartphone in the world: the Oppo Find 5 Smartphone.

It also offers a full HD display – meaning text, pictures and videos are more vivid and lifelike – and a 13MP camera with a dedicated camera button. It can even hold up to 2GB of RAM which allows it to do more things at once.

One feature that differentiates Oppo from its competitors is its ability to play Adobe Flash. The multimedia and software program is supported with video and sound in the device's browser.

Recommended retail price is $699.00

Contact:
BecexTech Australia
PO Box 6297, Point Cook, Vic 3030
Tel/Fax: 1300 558 873
Website: www.becextech.com.au

New Thorens turntables

Made in Germany and based upon the award winning older brother TD309, the TD206 and TD209 turntables from Thorens are feature packed and stand out in the sub-$2K price range.

The bespoke TP-90 tonearm uses the same ultra-low-friction, high-performance bearing and the innovative zero-stiction anti-bias system as the TP-92, along with a low noise electronically controlled DC motor. The two-part aluminium/acrylic platter is critically damped.

They're available in gloss white, black and red.

Contact:
Speakerbits
Unit F51/63 Turner St, Port Melbourne 3207
Tel: (03) 9647 7000 **Fax:** (03) 9681 8207
Website: www.speakerbits.com

CadSoft EAGLE Webinars

Mostyn Enterprises and CadSoft USA are pleased to host on the Element 14 Community website www.element14.com/community, a series of three webinars providing application training for the award-winning CadSoft EAGLE schematic and PCB capture software package. The latest version of EAGLE also allows seamless interfacing with Linear Technology's LTspice IV circuit simulation package.

The three 30-minute webinars will be presented by the CadSoft USA team, commencing at 10am Sydney local time, on October 19th and 26th, and November 2nd. The webinars will consist of 20 minutes instruction and 10 minutes Q&A.

The first webinar will cover an introduction to EAGLE and the Control Panel, Library description, and creating projects, new schematics and board files. The second webinar will consist of a review, making a circuit board module, creating a board from a schematic and auto-routing. The third webinar will cover a review, creating a new component library, and defining new schematic symbols and devices.

Details regarding webinar registration, and for purchasing the CadSoft EAGLE package, are available on the Mostyn Enterprises website. A free evaluation copy of the CadSoft EAGLE schematic and PCB capture software package is available from the CadSoft USA website www.cadsoftusa.com. Linear Technology's free LTspice IV circuit simulation package is available from their website www.linear.com.

Further webinars from Mostyn Enterprises are currently under development.

Contact:
Mostyn Enterprises (Technologies)
Tel: (02) 9834 1299
Website: www.mostynent.com

WORKSHOP ESSENTIALS

Centre Drill Set
- No. 1, 2, 3, 4, 5
- HSS M2 bright finish
- Industrial quality

~~$38.50~~
$33
(D508)

GREAT VALUE

4 Piece Countersink Set
- HSS M2 Bright Finish
- Range: Ø2 - Ø20mm
- Angle 45°

~~$66~~
$59
(D1051)

EDBD-13 Drill Sharpener
- 3-13mm or 1/8"-1/2"
- Diamond wheel
- Split point
- 80W, 240V motor

~~$99~~
$89
(D070)

GREAT VALUE

Cast Iron Bench Vices
- Acme screw thread
- Fitted width serrated jaws
- Manufactured from cast iron

100mm ~~$64.90~~ **$60** (V088)

127mm ~~$103.40~~ **$100** (V089)

GRIP

Includes **FREE** Magnetic Soft Jaws with V088 (V0534)

Includes **FREE** Magnetic Soft Jaws with V089 (V0535)

Industrial Drill Sets
- Precision ground flutes
- HSS M2 bright finish

25 Piece Metric
- Range: 1-13mm
- 0.5mm increments

~~$88~~
$79
(D1271)

29 Piece Imperial
- Range: 1/16 - 1/2"
- 1/64" increments

~~$90.20~~
$79
(D1281)

Extra Long Hex Key Sets with Ball End
Imperial Set (H800)
- 9 piece
- 1/16" - 3/8"

Metric Set (H801)
- 9 piece
- 1.5 - 10mm

~~$16.50~~
$14 EACH

Metric & Imperial Drill Gauge
- Stainless steel
- 1 - 13mm
- 1/16 - 1/2"

~~$16.50~~
$14
(M988)

GAUGE

RP7834 Air Tool Kit
- 1/2" impact gun
- 1/4" die grinder
- 3/8" ratchet wrench
- Air hammer & chisel set

~~$176~~
$159
(A053)

COMPLETE

SBD-20B Bench Drill
- 16mm drill capacity
- 2MT, 16 spindle speeds
- Swivel & tilt table
- 1hp, 240V motor

~~$319~~
$309
(D138)

Includes **FREE** Drill Press Vice V124

Valued at $22.00

WBS-5D Work Bench
- 1370 x 510 x 890mm
- Ball bearing slides
- Powder coated finish

~~$352~~
$329
(A383)

HEAVY DUTY

AR-P10 Air Hose Reel Retractable
- 15M x Ø9.5mm Polyurethane hose
- Wall or ceiling mount
- 232psi / 16 Bar pressure
- Includes dusting gun

~~$143~~
$129
(H045)

RAV2.75/36 Air Compressor
- 205 L/min pump
- 36 litre tank
- 100psi pressure
- 2.75hp, 240V motor

~~$418~~
$385
(C327)

MUST HAVE

WTC-1450 Tooling Cabinet Workstation
- 1170 x 580 x 1450mm
- 250kg bench capacity
- Key lockable drawers
- Includes drawer dividers

~~$1,023~~
$969
(T773)

MOBILE

AI-50GA Bench Lathe
- 230 x 500mm capacity
- 20mm spindle bore
- Quick change gearbox
- Speeds 100-1800rpm

~~$1,155~~
$1050
(L157)

HOBBY LATHE

SAVE $105

HM-10 Mini Mill Drill
- Dovetail column
- 2 speed gearbox
- Head tilts ±45°
- 350W 240V motor
- Travels: (X) 225mm (Y) 100mm (Z) 190mm

~~$869~~
$829
(M150)

COMPACT

BECOME A MACHINERYHOUSE MATE

SIGN UP FOR MATES RATES AT MACHINERYHOUSE.COM.AU/SIGNUP

GAIN ACCESS TO:
- ✓ ONLINE PROMOS
- ✓ EXCLUSIVE OFFERS
- ✓ TRACK ORDERS
- ✓ NEWSLETTERS
- ✓ LATEST RELEASES
- ✓ COMPETITIONS

ORDER NOW!

USE PROMO CODE: **12VDIODE**

TO RECEIVE THESE SPECIAL PRICES ONLINE OR INSTORE: Valid until 29-10-13

HARE&FORBES MACHINERYHOUSE

NSW	QLD	VIC	WA
(02) 9890 9111	(07) 3274 4222	(03) 9212 4422	(08) 9373 9999
1/2 Windsor Rd, Northmead	626 Boundary Rd, Coopers Plains	1 Fowler Rd, Dandenong	41-43 Abernethy Rd, Belmont

www.machineryhouse.com.au

SERVICEMAN'S LOG

Servicemen watching other servicemen servicing

Dave Thompson*

Sometimes, I have to swallow my pride and call in other servicemen to repair appliances in my home. And I must admit, being a serviceman, I like watching other servicemen servicing. I'm always curious and you never know what you might learn.

Items Covered This Month

- Watching servicemen while they service
- Fixing a spa bath
- Microwave oven repair

*Dave Thompson runs PC Anytime in Christchurch, NZ.
Website: www.pcanytime.co.nz
Email: dave@pcanytime.co.nz

ONE ASPECT OF being a serviceman is my perspective of other service companies' procedures and performance. This isn't unusual; people in any given walk of life will take particular note of others doing similar work.

There is a downside to this though; I played live music professionally for many years and was also part of a team bringing together a daily live kids' variety show on national TV. These experiences have dampened my enthusiasm for going to see live bands and watching some TV shows, because knowing how it is done removes a lot of the gloss and glamour. It's the same as knowing how a magic trick or illusion is done; while you can appreciate how the magician is performing his act, knowing the technical secrets detracts from the entertainment value.

At the same time, being a serviceman takes the shine off getting other servicemen in to do jobs I (for whatever reason) don't want to tackle. For example, a while back my washing machine started delivering more water to the outside of the cabinet than to the inside. It turned out to be a relatively simple fix but several aspects of the job really irked me at the time, aside from the obvious "I could've done it myself if I'd known how" hindsight that all DIY'ers and many servicemen deal with at various times.

The first annoyance came when talking to the company I'd telephoned to do the job. I explained (or so I thought) the problem pretty clearly in terms I was familiar with. However, once the customer service representative began asking his preliminary questions, I ended up feeling more and more stupid.

In my own business, I am keenly aware that my customers (and potential customers) have a diverse range of computer literacy. As a result, I take great pains to avoid leaving people feeling like they've been patronised and/or belittled during our customer contact.

My staff (when I actually had some in those golden pre-recession and pre-earthquakes days) were carefully trained in not only what to say but how to say it when dealing with customers. This ensured that customers didn't feel uncomfortable or in any way inadequate when describing the computer problems they were experiencing or what was going on with their machines. In fact, many people begin their accounts with "I'm hopeless with computers" or "I'm not very computer literate", as a kind of apology for the way they are about to describe the problem.

Our approach is to always try to put them at ease by telling them that everyone has their own way of describing computer hardware and how they work and to just to go for it, as we will understand what they mean. I also like to mention comparisons like "we don't have to be mechanics to drive a car" or "chefs to work the oven" either.

The absolute worst thing we (or any company) could do is make them feel like they are making a fool of themselves – which admittedly can sometimes be a challenge if their question or issue seems ludicrously simple. It sometimes isn't easy, yet much of our future business depends on how we deal with clients today and even more so on first contact.

Service call-outs

This approach extends to service call-outs as well. If a customer wants to book a call-out, I can tell them exactly when one of us is going to be at their home or place of work. If I say 10 o'clock, for example, we'll be there at 10 o'clock (or just before) unless something really drastic or unforeseen occurs. And in the rare case something does happen, I or one of my staff phone the client as soon as possible before the appointed time and explain what's happened. We then arrange for the technician to either arrive a little later or, if that's not convenient, make another appointment.

Unfortunately, the company I contacted to fix my washing machine was nowhere near as precise when it came to nominating a time for their technician to call. The best they could manage was to ask "morning or afternoon?". When I asked if it was possible to narrow the time-frame down a bit more, they said "no" because the technician had no way of knowing when he would finish his previous jobs.

That meant that I (or my wife) would have to take at least half a day off work just to be at home to meet the serviceman (because, of course, they don't work weekends). In my opinion, this is not really satisfactory but it's exactly

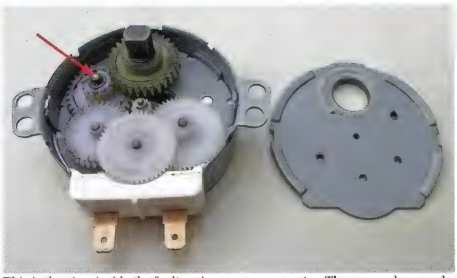

This is the view inside the faulty microwave oven motor. The arrowed gear axle was jumping out of its seat in the cover plate at right.

have meant delving inside the unit and dealing with a high-voltage capacitor that can store a lethal charge, even after the power has been disconnected.

However, I was lucky. To my delight, there was a pre-punched inspection cover in the cabinet base, held only at the corners by slender metal bridges that could be easily cut through with side cutters. Better still, the cleverly designed hatch could be refitted by rotating it 180° and securing it with a single self-tapper.

The motor itself was held with a single screw and in less than five minutes it was in my hand. The drive was transferred to the turntable via a simple plastic coupler. It was now clear that if there was a clutch of any sort it would have to be inside the motor itself.

I then remembered I had a defunct LG microwave in the garage that was waiting to be scrapped. Could it have a similar motor? It too was easily accessible and at first glance it looked identical. Unfortunately though, it was a 21V motor whereas I needed a 240V one. What's more, the round drive shaft was longer, with a single flat instead of the two flats that the Sharp motor had.

A quick internet search showed that turntable motors can be purchased on ebay for anything from $5 up to $80, despite all being physically very similar. The main differences seem to be in the voltage, RPM, power and type of drive shaft. The motor I needed was a 3.5W unit with a shaft speed of 3RPM. Most of those on sale had slightly lower power ratings and a higher RPM specification, some as high as 6RPM.

I figured that as I needed a motor with good torque, one with low RPM would be a better choice. Unfortunately, the most suitable ones were right at the upper end of the price range.

I now had to make a decision. Should I put the motor back temporarily and order a new one? Or should I dismantle the motor to see if the problem could be identified and perhaps solved? The risk with this latter option would be that the motor might not be repairable and I would then be without an oven until I could source a suitable replacement.

At that stage, I decided to get back on the internet and find out if others had reported the problem or found a fix. I soon discovered that others had experienced the same problem and that the suggested fix was a new motor.

Taking a chance

Being reluctant to buy a replacement motor without knowing what had caused the original problem, I decided to take a chance and grind away the turned-over tabs and remove the cover plate to expose the gears. When I did this, the fault was immediately apparent.

A synchronous motor in the centre drives a series of gears to reduce the rotor speed down to the drive-shaft speed of 3RPM. And it was obvious that the last cog before the drive shaft had been disengaging. Basically, its axle shaft had been only shallowly seated in the cover plate. When the pressure was too much, the shaft simply popped out, allowing the cog to deflect sideways and skip a tooth. This created the clunk and momentary loss of rotation.

Once the pressure was relieved, the shaft would then pop back into place. However, over time, the shaft had worn an escape path in the cover plate to the point where sometimes it would not pop back into position. This explained why the turntable sometimes did not rotate at all.

The accompanying photo shows the motor with its internals exposed and the rogue axle arrowed. Beside it is the cover plate with its inside surface showing. If you look carefully, you can see the wear around the axle seat in the cover plate.

Replacing the axle

After some thought, the most practical solution seemed to be to replace the problem axle with one that was slightly longer and more securely seated. And that's what I did. After finding a suitable axle in my spare parts drawers, I spent some time cutting and grinding it to just the right length, with a slight taper at the end so that it would seat more securely. Once I had it right, I reassembled the motor gears, redistributed some of the excess lubricant to where it was more needed and fixed the cover plate in place with glue.

I couldn't crimp the cover plate in place the way the maker had but I didn't see that as a problem. Once the motor was mounted back in place, the cover plate couldn't move anyway, so there was no real need for it to be crimped.

It's now been several weeks since the motor was repaired and to my great satisfaction, the cure has been permanent. However, I'm going to be careful to avoid obstructing the free rotation of the turntable, otherwise the motor might stall or possibly strip the gears.

And if that happened, I would have no option but to buy an expensive replacement motor . . . or a new microwave. SC

eventually decided it was time to call in the professionals, which is why I was now standing and watching as the oven repair guy removed the door and panels. The big difference, of course, was that he knew what he was doing and it wasn't long before he said the whole frame of the oven had twisted beyond repair and the whole assembly would need to be replaced. We measured up the walls and found the wall and aperture for the oven were as square as they would ever be, but the oven frame had obviously been forced in several directions during the quakes and this had permanently bent it out of shape.

The bad news was that a new frame assembly for this particular model was going to cost many hundreds of dollars. However, we had well and truly fallen out of love with this particular appliance, so that was hundreds of dollars too much. The repair guy also told us that it wouldn't be a wise investment to spend that kind of money on something of this vintage and since he had no side-line business in new ovens, his advice was obviously unbiased and so a new unit was the best way forward.

Shopping is not one of my favourite pastimes, except when I'm looking for tools or something I'm personally interested in. Indeed, most guys will agree that appliance shopping is tough duty. Not only are there literally thousands to choose from, there is no possible way the one the man likes will be the one that ends up being installed at home. There's also the very real danger that you'll decide on one and pay for it only to find the exact same model advertised the very next day for considerably less money.

Anyway, we duly picked a nice unit out and a friend helped me mount it in the gap left by the old one and wire it in. In New Zealand, a home handyman can wire in a wall oven provided there is an isolation switch within a few metres. Job done!

Microwave oven repair

A. P. of Briar Hill, Victoria recently cured an unusual fault in a microwave oven. Here's his story . . .

Having retired not so long ago and now expected to take on additional home duties, I had the perfect excuse to replace our 30-year old Toshiba microwave oven with a brand new Sharp R-890N. As well as being a lot more powerful, this new unit also came with top and bottom heating elements for grilling and convection oven cooking.

Admittedly, the price of the new unit was about four times that of an ordinary microwave oven but I figured that the ability to quickly and efficiently bake, roast and grill foods would more than make up for the expense.

Anyway, with the Sharp installed, it wasn't long before I was experimenting with cakes, crispy potato wedges and roast meats, all with impressive results. My only concern was an occasional intermittent mechanical "clunk" from inside the unit, followed by a momentary interruption to the turntable rotation.

It seemed to happen only when there was a particularly heavy load on the turntable. As everything else was working fine, I assumed that this clunk was probably the result of a clutch mechanism being activated, this being designed to prevent overloading of the turntable motor. In retrospect, I should have made a warranty claim but at the time, I dismissed the problem as a minor one and quite possibly normal behaviour although there was no mention of it in the owner's handbook.

The clunk gets worse

I didn't give it much further thought over the next 18 months but then I noticed that the clunk was gradually becoming more frequent. And it was also happening with lighter loads on the turntable.

The turntable itself is rather unusual. Because of the high operating temperatures, it is made from heavy pressed steel finished in vitreous enamel. And instead of the more usual captive rollers to support the turntable, this one has three small, axle-mounted wheels welded to its underside. I wondered if these wheels might have become sticky under load, thereby putting a greater strain on the motor.

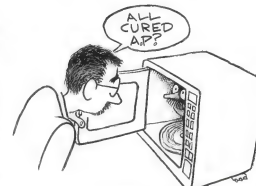

A.P. OF BRIAR HILL, VIC. RECENTLY CURED AN UNUSUAL FAULT IN A MICROWAVE OVEN...

They seemed to be running freely enough but just to be sure, I carefully cleaned each one using degreaser and detergent.

Unfortunately, this gave no improvement and with continued use, it was clear that the problem was rapidly getting worse. By now, it was well outside the warranty period and I was kicking myself for not reporting the problem at an early stage to the manufacturer.

A few more weeks went by and I then noticed that there were occasions when the turntable had stopped altogether. This was annoying since with two cups of coffee inside, the one closest to the waveguide would boil over before the other had reached the desired temperature. Curiously, I noticed that by giving the turntable a gentle nudge back and forth, it would then always commence rotating as it was meant to when the door was closed and the microwave restarted.

So much for all my earlier theorising about a clutch mechanism! The unit was clearly faulty.

Deciding that the problem could be ignored no longer, I up-ended the unit, hoping that the motor might be accessible. My worst fear was that the motor had been the first item fitted during assembly and that the rest had been built around it! If it had, it would

Servicing Stories Wanted

Do you have any good servicing stories that you would like to share in The Serviceman column in SILICON CHIP? If so, why not send those stories in to us? In doesn't matter what the story is about as long as it's in some way related to the electronics or electrical industries, to computers or even to car electronics.

We pay for all contributions published but please note that your material must be original. Send your contribution by email to: editor@siliconchip.com.au

Please be sure to include your full name and address details.

Serviceman's Log – *continued*

The dogs chewed on my spa bath

F. W. of Airport West, Victoria recently got roped into fixing his daughter's spa bath. It wasn't so much a case of the dog ate my homework but the dog chewed on something it "shouldna oughta" chewed on. Here's what happened . . .

Being a retired licensed aircraft engineer and general handyman, I often get called on by my kids to fix various items. Just recently, I received a call from my daughter with the news that her spa bath had stopped working. As the spa is in a 20-year-old house they bought last year, she thought that it might be time to get a new one but suggested that perhaps I could take a look at it first.

I didn't know how a spa bath worked but with common sense and a multimeter, I figured that I would soon find out.

When I got there, I pushed the button on the spa bath edge and confirmed that it (the spa) didn't make any of the noises or bubbles it was supposed to. At the side of the house outside the bathroom, I found a large metal cover which I removed. Underneath was the spa pump and its motor, with a 240VAC lead going to a wall-mounted GPO.

I soon confirmed that 240VAC was getting to the plug but not to the pump motor connectors. Closer inspection revealed that there was a microswitch on the top of the motor, with what looked like a small cylinder attached. A piece of plastic tubing ran from this cylinder and disappeared down through the cobwebs and through the brick wall into the underside of the spa bath.

I then realised that the pushbutton switch on the bath wasn't really a switch at all but was in fact an air master-cylinder. Obviously, you do not want electrics anywhere near the spa bath 'switch' with all that water and bubbles around. Basically, to operate the spa, you pushed the button on the bath and the air pressure in the tube would then move the small cylinder piston on top of the motor and operate the microswitch. This then switched on the motor.

So what was at fault? There were various possibilities: a faulty master cylinder, a faulty slave cylinder, or perhaps it was the microswitch. As it turned out, it was none of these.

~THE DOGS ATE MY SPA

Clearing away the cobwebs revealed the problem. The plastic tubing between the small slave cylinder on top of the motor and the master cylinder had been severed, thereby preventing the slave cylinder from operating.

So how did that happen? My money is on two new Border Collie pups that had just recently joined the household and had become bored. Chewing on the tubing had relieved their boredom at the expense of the spa bath.

A small garden spray joiner was used to join the two ends of the plastic tubing and the spa bath immediately resumed normal operation. An old gate was then erected to prevent the four-legged miscreants from re-offending.

the serviceman's trade – especially if he wants to get more of the customer's business.

In this case, the service company didn't get my repeat business. When my oven subsequently went on the blink, I called someone else because while the technician was OK, I wasn't impressed with the rest of the way his service company did things.

This time around, I was given a time window of a few hours as to when the technician would arrive and this made planning things much easier. He also said he'd call me to confirm the exact time closer to the appointed hour. This was a much better start to our relationship and when he arrived exactly when he said he would, I felt good about giving them the job.

This serviceman was very friendly and chatty and was more than happy to have someone looking on while he did the job. He was forthcoming with what he thought the problem was with the oven and what our possible options were likely to be, all while he was busy removing the oven's door and various access hatches.

The earthquakes did it

Our oven is one of those dual wall-mounted models, installed by the home's previous owner. And the problem with wall ovens is they rely on everything being square for everything to align, seal and work properly. The recent Christchurch earthquakes didn't do things much good in that respect and while the house is still basically square and level, the oven got knocked about quite a bit which resulted in the door no longer closing or sealing properly.

Most oven doors are designed to stay open once pulled past a certain point but ours wouldn't. And when closed, it was obviously out of square; not only could you see it didn't line up properly, when the oven was on you could feel heat escaping from gaps to the extent you had to be careful you didn't get scorched.

So something had to be done. Being a bloke and a serviceman, I had an obligation to at least have a go at fixing it and so I did. I took the door off and removed all accessible panels and covers but to me everything looked a long way out of whack and no matter what (or where) I prised with my trusty jemmy bar, I couldn't get any significant movement.

After a period of static inspection (ie, standing and staring at it), I decided it was beyond my oven-repair skills and so I put it all back together. I did manage to rig up a door-latching system using a spring, a rubber band and a self-adhesive plastic hook and this at least kept the door closed and the majority of the heat inside the oven when it was operating.

However, after subsequently going through a few springs and hooks, we

how things are done in many service industries. It's certainly a much more common approach than giving clients an accurate time as to when they will be on-site.

As a result, many customers are surprised when we offer a specific appointment time and they seem to appreciate the fact that we arrive on time. It might be more difficult managing such a schedule but I think we get a lot of repeat business because of the way we arrange and keep appointments.

Still, at least when these guys agreed to an afternoon visit, the service guy did arrive as arranged. It was mid-afternoon when he showed up and he was very good at his job. The washing machine was fixed relatively quickly and is still going strong years later, in no small part because of some very helpful advice the serviceman gave us regarding quirks peculiar to our particular model.

That said though, he didn't seem overly keen for me to be standing around while he did the job, although to be fair, that applies to most serviceman. This may well be because they just want to get on with their work undisturbed or perhaps because they don't want to give away any trade secrets.

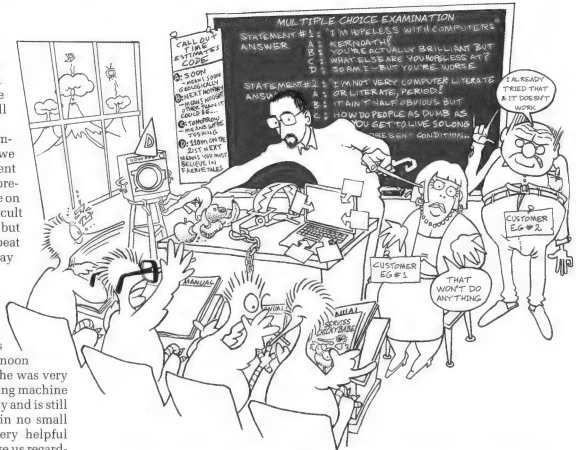

~ MY STAFF WERE CAREFULLY TRAINED IN NOT ONLY WHAT TO SAY BUT HOW TO SAY IT WHEN DEALING WITH CUSTOMERS

Watch but don't interrupt

Personally, I don't mind clients watching what I do as long as they don't constantly (and unproductively) interrupt or try to influence how I'm doing things. Most who take an interest will ask me if they can pull up a chair and watch and that's usually fine. However, nothing irks me more than statements by hovering clients along the lines of "I already tried that and it didn't work", or "that won't do anything" or "what does that have to do with fixing the problem?".

To those who ask such things I patiently explain that I have a trouble-shooting process to go through and it may well be that something I do has already been done but this is the way I have to do it. This usually settles things down and while it hasn't yet come to the point where I've had to ask someone to shut up and let me get on with it, I've been very close to this point on several occasions!

The truth is that nothing I do is top-secret and clients wanting to watch usually aren't interested in seeing what I do so that they can do it themselves next time. Instead, it's more about being interested in how I solve a problem they've likely Googled and had a go at fixing themselves anyway.

Even if the client is a pedantic type and wants a running commentary, I'm happy to provide it. After all, they are paying for the service and my time, so that's their prerogative.

In reality, most clients aren't interested in exactly what I'm doing and probably think (correctly) that the more they interject, the longer it will take and the more it will cost. Instead, they just want their machine fixed so that they can get back to work or go back to doing what they were doing.

I am keenly aware of all this when working on-site so I must admit to being rather put out when the washing-machine guy made it plain he didn't want to talk or explain what he was doing, or have me hovering around while he worked. Once I'd related the symptoms to him, it was as if I didn't exist. I got the impression he thought I was trying to watch what he did so I wouldn't need to call him again.

That may have been the case to some extent but to be honest, it was more out of professional curiosity. Basically, it was more a case of wanting to see the innards of a modern washing machine than wanting to work on my own appliances.

It's the same with working on cars. In days gone by, I've pulled engines and gearboxes out, stripped them down and rebuilt them. I also once handled all my own automotive repairs but these days I just don't have the facilities (or the motivation) to do this. Instead, it's far easier to let a professional who knows all the tricks of his trade do the work.

To be fair, the washing machine guy did clearly explain what he'd done once the job was finished and that was good. I've learnt that most people want to at least know what the problem was and while some are happy with a brief description, others want a bit more detail. Knowing which "speech" to give is all part of keeping our clients happy and is yet another important aspect of

TECH FEST

OCTOBER EDITION

Prices valid until 23/10/2013

Online & in store

Economy Network 4 Channel DVR

Price breakthrough! An affordable 4 channel DVR for home or office surveillance. Connect to a computer network to view video remotely from anywhere in the world using a web browser or Smartphone/iPhone® (via free installed app).

- 500GB of storage for up to 300 hours of continuous video recording
- Control across the network or by using the included mouse or remote control
- Manual, scheduled or movement activation
- Size: 300(L) x 210(W) x 50(H)mm

QV-3049

NEW

$249.00

Cameras available in store **Bullet 600TV Lines Camera** (QC-8632 $99)

Wi-Fi Inspection Camera

A smart inspection camera that uses your Smartphone as the screen. Hold your Smartphone and point the camera where you please. Includes a bracket if you require the Smartphone to be fixed.

- IP67 rating (camera only)
- 1/8" Colour CMOS camera
- Flexible gooseneck length: 685mm
- Handle size: 180(L) x 45(W) x 50(D)mm

QC-3351

DUE EARLY OCTOBER.

NEW

$149.00

Note: iPhone® not included

In-Car FM Transmitter and Charger

A convenient way to playback music from your iPhone®5 Smartphone through the car's sound system. It features a Lightning connector to charge an iPhone®5 and a 3.5mm plug for audio streaming through the FM radio band.

- Up to 5m transmission range
- Built-in microphone
- USB port
- Size: 100(L) x 30(W) x 12(D)mm

AR-3127

NEW

$29.95

DUE EARLY OCTOBER.

Note: iPhone® not included

500W 240V Electric Drill

Suitable a variety of tasks around the house or on the job. Features a forward/reverse switch, lock setting, and moulded plastic grip. Will accommodate bits up to 10mm and includes a handy belt clip.

- Mains powered
- Cable length: 1.8m
- Size: 250(L) x 190(H) x 65(D)mm

TD-2493

DUE EARLY OCTOBER.

NEW

$19.95

Jaycar Electronics

Better, More Technical

60W Solder/ Desolder Rework Station

Complete solder/desolder station for production and service use. The temperature is easily adjusted in 1° increments with simple up/down buttons and the soldering/rework functions can be operated independently of each other.

- 60W ESD Safe
- Suitable for lead-free solder
- Celsius and Fahrenheit display
- Microprocessor controlled
- Size: 225(L) x 215(W) x155(H)mm

TS-1574 **WAS $369.00**

$299.00

SAVE $70

Wind Speed Meter/Thermometer

Capable of measuring wind/airflow parameters at the same time as monitoring temperature.

- Metres/sec; km/hr; feet/min; miles-per-hour; knots
- Cubic metres/minute; cubic feet/minute
- Air temp, 0-50˚C (0.1˚C resolution)
- Vane impeller ball bearing mounted
- 1m vane probe lead

QM-1646

NEW

$99.00

Automatic Headlights Kit for Cars

Ref: Silicon Chip October 2013

Like modern cars, this kit will turn your car headlights on automatically if you forget to turn the lights on when it gets dark. It can also turn the lights off when you park to avoid a flat battery. See website for full features.

- Kit supplied with double sided, solder-masked and screen-printed PCB, die-case cast, buzzer and electronic components. Cabling not included.

KC-5524

NEW

$59.95

DUE LATE OCTOBER.

JAYCAR ROXBURGH PARK

NOW OPEN

Unit 4
195 Somerton Rd
Roxburgh Park,
VIC 3064
Ph: 03 8339 2042

5-in-1 Jump Starter

Your personal roadside assistant! Includes heavy duty insulated jumper leads, a 400W inverter, LED work light, 12V power outlets, status gauges, and even a 260PSI air compressor! Powered from the built-in 18Ah SLA battery and comes with mains and 12V charging cables.

- Size: 220(L) x 215(W) x 295(H)mm

MB-3594 **WAS $149.00**

$119.00

SAVE $30

6-Way Membrane Switch Panel with Relay Box

An ultra compact 6-way 12VDC touch control panel to control devices in automotive, camping, or marine applications. The 6 buttons on the switch panel control 6 relays in the separate control box with an included 1m long ribbon cable resulting a completely waterproof (IP67) switch panel.

- Built-in resettable fuses
- Max current: 10A per channel, 35A total
- Touch Panel size: 70(L) x 63(W) x 1(H)mm
- Membrane Control Box size: 135(L) x 90(W) x 33(H)mm

SP-0900

NEW

$99.95

12" Active Subwoofer

Explosions, car crashes, and other movie events that demand thumping bass vibrations will be drastically enhanced with this 12" active subwoofer. The amp is rated at 70WRMS with a 30Hz-250Hz frequency response.

Great addition to a home theatre system.

- Matte black finish
- Size: 436(L) x 433(W) x 446(H)mm

CS-2429

NEW

$199.00

To order call 1800 022 888

www.jaycar.com.au

TECH TOOLS

Soldering Tools

Temperature Controlled Soldering Station

Ideal station for the advanced hobby user. It features accurate analogue temperature adjustment, ceramic element and a lightweight pencil that will give you hours of fatigue-free soldering.

- Power: 48W
- Temperature range: 150 - 450˚C
- Lead-free rated
- Size: 150(L) x 115(W) x 92(H)mm

TS-1564

BONUS Lead Free Solder (NS-3094) worth $7.95

Spare pencil & tips available separately

$99.00

Pro Soldering Gas Kit

Excellent value and ideal starter kit.

- Kit contains Pro Gas Soldering Iron with tips, cutters, desolder braid, electrical shears, wire stripper/cutter, solder splice heatshrinks and heat shrink pack.

TS-1114

$99.00

portasol® Technic Gas Soldering Iron

Compact yet powerful and reliable. It offers a run time of around 60 minutes, and tip temperature is adjustable up to 450˚C. The protective end cap features a built-in flint type ignitor, and if the gas is left on, it will turn it off when replaced.

- Size: 170(L) x 19(Dia)mm

TS-1305

$59.95

Drill Assistant

Drill holes in walls easily, on the level and with no mess. Device uses vacuum suction technology to attach virtually to any wall without leaving a mark. Its perfect combination of laser leveler and drill dust collector lets you finish jobs in minutes.

- Size: 238(L) x 100(W) x 48(H)mm

TD-2151

NEW

$19.95

Sheet Metal Bender

This unit sits in the jaws of your bench vice (100mm+ recommended). It retains itself in the vice with strong recessed magnets. One half consists of the familiar blade that bends the sheet metal and the other half in the 90 degree recess that the blade pushes into.

- Size: 125(L) x 30(W)mm both halves

TH-1763

NEW

$49.95

32 Piece Precision Driver Set

High quality set for all those delicate jobs. Tactile handle with hardened hex shaft that extends from 140 to 210mm. Ideal for model making, electronics etc.

- Slotted, Phillips, Pozidriv, Torx and Hex
- Case size: 157(L) x 100(W) x 27(D)mm

TD-2106

$17.95

30 Piece Electronic Tool Kit

An excellent tool kit for electronic or computer repairs with all the essentials - cutters, pliers, screwdrivers (Phillips head, slotted, Posidrive), nut drivers etc. See website for full contents.

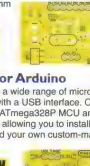

- Case size: 210(L) x 140(W) x 38(D)mm

TD-2107

$29.95

Arduino Corner

USB Li-Po Charger

Charge Li-Po cells from any USB source, USB plugpack, laptop or PC.

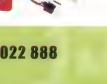

- 3.7V output for a single Li-Po cell
- Micro-USB jack
- Size: 27(W) x 16(H) x 10(D)mm

XC-4243

NEW

$12.95

Arduino Experimenters Kit

Learn about the exciting new world of Arduino with these easy to build projects. From flashing an LED to moving things with a servo. Complete with instructions and a supporting web page and software examples.

- No soldering required

XC-4262

$89.95

Thousands Sold!

USB-Serial Adaptor Module

Connects to the USB port on your computer and acts as a virtual serial port, converting the USB signals to either 5V or 3.3V logic level serial data.

- Size: 46(W) x 26(D) x 10(H)mm

XC-4241

NEW

$22.95

ICSP Programmer for Arduino

Program new applications into a wide range of microcontrollers using this ICSP programmer with a USB interface. Compatible with Arduino boards, ZZ-8726 ATmega328P MCU and fully supported by the Arduino IDE, allowing you to install or update Arduino-compatible boards and your own custom-made projects.

- Size: 56(L) x 46(W) x 22(H)mm

XC-4237

NEW

$24.95

10MHz Handheld Scope DMM

Smartly combines a well featured digital oscilloscope and a 4,000 count True RMS digital multimeter into one versatile package. Features a USB interface and PC logging software to match. Perfect for laboratory work or for technicians working in the field.

- 128 x 128 graphic LCD display
- Autoranging
- Size: 186(L) x 86(W) x 32(D)mm

QM-1577 **WAS $399.00**

$349.00

SAVE $50

102 Piece Electric Screwdriver Kit

Features a powerful X torque electric driver and a massive array of stainless steel bits. All packaged in a tough alumnium carry case that will hold and protect your screwdriver, mains charger, and all the bits.

- Case size: 250(L) x 153(H) x 88(D)mm

TD-2491

NEW

$39.95

DUE EARLY OCTOBER.

LED Table Lamp and Work Light

The light produced has a rendering index of 90+ (CRI) and flicker free. The touch sensitive buttons allow you to control power and colour temperature. The LED arm can be folded and rotated and can also be completely detached from the base so you can use it as a work light.

- 100-500 Lumens
- Mains adaptor included

SL-3139

NEW

$89.95

Economy 4 Channel DVR

Designed for small surveillance systems in the home or office. Capable of recording full D1 (704 x 576) resolution at 25 frames per second on each channel. Supplied with a 500GB HDD to store up to 300 hours of continuous video. Connect to a computer network to view video remotely using a web browser or Smartphone/ iPhone® (via installed app). See in-store for range of cameras.

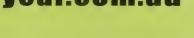

- H.264 Compression
- Motion trigger recording
- Size: 300(L) x 210(W) x 50(H)mm

QV-3029 **WAS $279.00**

$229.00

SAVE $50

TECH GADGETS

Jaycar Electronics — Better, More Technical

Back-up Battery Case to suit iPhone® 5

Clip your iPhone® 5 into this stylish black case and get an additional 8 hours talk time. Does not interfere when charging or taking pictures. This unit is the perfect iPhone® accessory.

- Size: 135(L) x 60(W) x 15(D)mm

MB-3695

NEW $39.95

Note: iPhone® not included

Portable Power Bank with Solar Charger

Charged via the included 12V in-car cigarette USB charger or from the built-in solar panel. It has two USB ports that output up to 2.1A. Supplied with 6 interchangeable connectors to suit many devices, and a carabineer so you can attach it to a bag.

- 4000mAh Li-ion battery
- Size: 76(L) x 33(W) x 29(D)mm

MB-3615

NEW $69.95

Note: iPhone® not included

4 Port 2 Way HUB

No more second guessing which way to insert your USB cable. You can insert your cable either way. Connect up to four devices.

- USB 2.0 compliant

XC-4304

NEW $19.95

Hard Drive Dock with Cloud Access

Allows you to store and access files on your network or across the Internet using a web browser or Smartphone. Features USB 3.0 & Ethernet, media server with UPnP & iTunes® support, network file server and more. See website for full list of features and setup options.

- Supports 3.5/2.5 inch SATA hard drives
- Size:134(L) x 114(W) x 55(H)mm

XC-4691 **WAS $119.00**

$99.00 SAVE $20

Note: HDD not included, and requires freely available third-party app for Smartphone support.

Bluetooth® Audio Dongle

Enables your audio device to transmit or receive wireless stereo audio. Just plug your device into this transmitter/ receiver and you'll have wireless audio capability.

- Size: 45(L) x 33(W) x 7(H)mm

AA-2085

NEW $49.95

Universal Remote Control with Keyboard

Control your media player, Smart TV, home theatre PC, or gaming console with one device! Features a full QWERTY keypad with optic finger navigation for mouse-like control.

$34.95

- Includes IR receiver
- Size: 167(L) x 51(W) x 15(D)mm

AR-1723

19" Rack Mount Enclosures

Available in flat packed or assembled, these 19" cabinets are ideal for studios, PA, sound reinforcement, IT, or phone systems installations with a size and configuration to suit any application. Comes in 1.8mm solid steel powder coated cabinets with clear tempered glass doors.

- Size: 530(W) x 360(H) x 450(D)mm

Flat Packed HB-5170 **WAS $159.00 NOW $129.00 SAVE $30.00**

Assembled HB-5171 **WAS $189.00 NOW $159.00 SAVE $30.00**

FROM $129.00 SAVE $30

Handy Keyboards

Bluetooth® Foldable Keyboard

This foldable keyboard can half its size from a 285mm to a modest 133mm so it's easy to transport without damaging the keys.

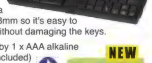

- Powered by 1 x AAA alkaline battery (included)

XC-5202

NEW $39.95

Mini 2.4GHz Wireless Keyboard

Operates on 2.4GHz band for easy wireless access. Features a full keyboard, multimedia keys, trackball, mouse buttons, and scroll wheel to give you all keyboard and mouse functions in one device.

- 9m operation range
- Size: 261(W) x 112(D) x 30(H)mm

XC-4943 **WAS $49.95**

$39.95 SAVE $10

Also Available:

Mini Bluetooth® Keyboard

XC-4945 **WAS $49.95 NOW $39.95 SAVE $10.00**

Smartphone & Digital Camera Leads

Suits many digital cameras.

NEW $5.95 EA

- 0.5m

USB A Male to USB Micro-B Lead	WC-7723 $5.95
USB2.0 A Male to B Male Lead	WC-7705 $5.95
USB2.0 A Male to S-Pin Mini-B Lead	WC-7709 $5.95

WC-7723 WC-7709 WC-7705

Serial Cable

DB9 Female to DB9 Female Null Modem Cable

- 0.5m

WC-7511

NEW $6.95

WC-7511

Monitor Cables

VGA Monitor Connecting Cable 0.5m

WC-7583 $6.95

XVGA Monitor Connecting Cable 0.5m

WC-7585 $8.95

NEW FROM $6.95

Magnetic Wall Mount for iPad®

Safely mounts iPad® in a prominent location where you can easily find and use it. It will stick to any flat surface with its magnet adaptor pad (2 x screws/plugs supplied.)

- Silver metallic frame

HS-9013

NEW $24.95

Note: iPad® not included

Hi-Tech Security

2.4GHz Digital Wireless 7" LCD DVR and Camera Kit

Simple to install and setup, this DVR kit is ideal for homes, offices or retail stores where security is essential. Monitor footage on its 7" LCD screen, or remotely on your iPhone® or Android device. With ethernet capability and IR LEDs enabling you to record at night. Recording can be motion-triggered to save storage space on your SD card (available separately) so you never miss a thing.

- Quad screen display
- 150m wireless range line of sight
- Weatherproof camera

QC-3678

NEW $399.00

Spare camera available separately

NEW QC-3679 $149.00

Wireless Alarm and Dialler Kit

Package deal with 8 Zone Wireless Alarm Kit (LA-5145) and GSM Dialler (LA-5164) so you can be notified with a phone call when the alarm has been tripped.

NEW $299.00

Includes:

- LCD control panel
- Key fob remote
- PIR sensor
- 2 x reed switch sensors for doors or windows
- Key fob remote with panic button
- GSM Dialler LA-5164

LA-5169

Note: LA-5164 GSM Dialler requires a SIM card.

Home Theatre Speakers

8" Active Subwoofer with Satellite Output

Incorporates 2 x 15WRMS audio output for satellite speaker connection for true 2.1 stereo performance. Housed in a black enclosure, this active subwoofer will enhance movie audio and more vibrant and immersive in-game gun battles.

NEW

$149.00

- 8", 30WRMS
- Size: 350(L) x 260(W) x 315(H)mm

CS-2433

2.1 Speaker Subwoofer Package

Combine our 8" subwoofer (CS-2433) and a pair of 2.5" cube speakers (CS-2431). Great for a home theatre or gaming console.

NEW

$169.00

CS-2434

CD to /USB/SD Encoder with Clock & Radio

Play and digitally encode your old CD or cassette tape collection straight to SD card or memory stick as MP3 files. No PC required.

- Requires 2 x AAA batteries
- Size: 250(W) x 204(D) x 85(H)mm

$49.95

SAVE $10

GE-4138 **WAS $59.95**

USB Turntable with Amp

Copy your LPs, 45s or even 78s straight to your PC, or simply listen to your record collection via the built-in amp and speakers.

- USB cable included
- Size: 320(W) x 265(D) x 85(H)mm

$59.00

SAVE $10

GE-4056 **WAS $69.00**

Rechargeable Bluetooth® Headset with Mic

Talk hands-free while driving, or connect to your Bluetooth® enabled PC or PS3 for hands-free chat on Skype, MSN, games etc. Can pair with two Bluetooth® devices and features anti-noise technology for clear conversations.

- Size: 216(W) x 65(H) x 150(D)mm

$34.95

SAVE $5

AA-2080 **WAS $39.95**

PLL World Band Radio

Receives FM, AM(MW, with 9k or 10k step), SW, LW, AIR bands and uses Phase Locked Loop (PLL) technology to ensure rock-steady, drift free reception. Features sleep function, 500 programmable stations and manual, auto or preset station search.

- Requires 2 x AA batteries
- Size: 120(W) x 75(H) x 30(D)mm

$59.95

AR-1733

Rechargeable In-Ear Stereo Bluetooth® Headset

Durable, lightweight Bluetooth® headset suitable for casual or sports use. The cable wraps around behind your neck staying clear of your arms and torso as you do your favourite exercises.

NEW

$74.95

- 54mm long

AA-2069

Portable DAB+/FM Radio

Never miss your favourite radio stations while you run, cycle or commute. Ultra-compact DAB+ radio that fits in your pocket which provides excellent reception and crystal clear digital sound. Runs on 2 x AAA batteries (not included).

- Earphones included
- Size: 68(L) x 38(W) x 21(H)mm

$49.00

AR-1754 Limited Stock

Note: DAB+ not available in all areas.

Portable Speakers

Rechargeable Speaker with Amplifier

Simply plug in a iPod®, CD player, MP3 player or microphone and it's ready to go. Includes rechargeable batteries with a runtime of about 12 hours and includes a wireless hand-held microphone and a wireless transmitter for lapel or lavalier microphone attachment.

$299.00

- 50WRMS output
- Battery powered with built-in rechargeable battery
- 3 channel mixer with tone control on master
- Size: 264(W) x 273(H) x 264(D)mm

CS-2513

Padded Nylon Carry Bag

CS-2511 $29.95

Limited Stock

Portable Guitar Practice Amp

Feature packed with 32 built-in live rhythm drum patterns, volume, gain, distortion, overdrive and tone controls. AUX-IN jack to connect a CD/MP3 player and jam with your heroes.

- Headphone jack for private practice
- Built-in E-string tuner
- 2W Mono speaker
- Requires 1 x 9V battery for up to 8 hours play
- Size: 180(L) x 90(W) x 155(H)mm

$99.00

CS-2553

Limited Stock.
Not available online.

10" Portable PA System

Charge an iPhone®, iPod® or iPad® and easily share music. Features a built-in battery for up to 8 hours of operation and a retractable and fold out handles and wheels at the base for easy transportation.

- Output power: 22W
- Size: 500(H) x 465(W) x 325(D)mm

$299.00

CS-2547

Note: iPhone® not included

Get Ready for the Party Season

Mini Laser Light Show with RGB LED

Features a full colour RGB LED that adds vibrancy and substance to each laser pattern. Cycle through patterns; modes; switch between red or green lasers, adjust the speed with the included remote control. Great for restaurants, foyers, or parties.

- 240VAC, 50Hz power
- Size: 140(L) x 105(W) x 55(H)mm

NEW

$129.00

SL-3453

Small Red/Green Laser Light Show

Add a colourful ambience to a room. Includes a mounting bracket and flexible tripod stand and power supply. The included remote control can adjust the mode, pattern, speed, and lets you switch between red/green/both colours.

- 240VAC, 50Hz power
- Size: 115(L) x 91(W) x 50(D)mm

NEW

$99.00

SL-3455

15" Party Speakers

The big daddy of party sound with 15" bass driver and 120WRMS power handling. Can be driven by amplifiers with modest outputs and still provide impressive sound. Overload protected.

- Sold individually
- Weight: 25kg
- Size: 740(H) x 505(W) x 350(D)mm

$149.00 EACH

BUY 2 FOR $250 SAVE $48

CS-2515

VIDEO

Jaycar Electronics
Better, More Technical

Remote Control AV Selector Switch

Connect up to 4 AV sources to one television and switch between them remotely. Features 4 x RCA composite/S-Video inputs and 1 x RCA composite/S-Video output.

- Size: 190(L) x 15(W) x 50(H)mmm

AC-1654

$44.95

HDMI Wall Plates with Flylead

Comes with a single or dual HDMI port with flexible flylead for better inner wall clearance. Standard Australian/NZ GPO mount with HDMI sockets for AV installations.

Single PS-0281 $14.95
Double PS-0283 $24.95

FROM $14.95

HDMI Splitter

Share the latest HD movies, TV shows, music videos, corporate videos from a Blu-Ray player, HD media player or digital set top box across multiple displays. Feature stunning 3D content and support for 4Kx2K resolution. Power supplies included.

2 Port
- Size: 63(L) x 54(W) x 18(H)mm

AC-1700 $69.95

4 Port
- Size: 154(L) x 69(W) x 23(H)mm

AC-1702 $99.00

FROM $69.95

PS-0283

PS-0281

Video Baluns

These devices simplify CCTV cabling and increase transmission distances without the need for video amplifiers.

Single Video Signal Baluns

Designed for direct connection to a single video source. Great for installations where a single camera is a long distance from the display. Transmission distance is up to 600m for B&W, 400m for colour and 1000m for items with an active receiver or hub.

- Size: 193(L) x 15(W) x 21(D)mm

QC-3660

NEW $14.95

Combination Signal Baluns

Combining composite video, audio and power for transmission over one UTP Cat5 cable. Supplied with one transmitter and one receiver, this kit will transmit video signals up to 200m. Suitable for items such as PTZ cameras or alarm sensors.

- Size: 42(L) x 21(W) x 21(D)mm

QC-3662

NEW $29.95

Multiple Video Signal Baluns

Use one Cat 5 cable to connect up to four CCTV cameras. Can also be used with a four way balun on each end or combined with a single termination baluns such as QC-3660 shown above.

- Size: 130(L) x 52(W) x 28(H)mm

QC-3664

NEW $29.95

Indoor Amplifier TV Splitters

Split and amplify your UHF, VHF or FM signals to 2 or 4 outputs with these handy amplifier splitters. Features high gain and low noise to ensure your signal is of a high quality.

- Mains adaptor included

2 way
- Size: 110(L) x 70(W) x 35(H)mm

LT-3282 $24.95

4 way
- Size: 158(L) x 80(W) x 45(H)mm

LT-3284 $34.95

FROM $24.95

FREE 1.5m Coax Cable (WV-7367) worth $3.50

HDMI Audio Extractor

No need to throw out your old audio system. Just use this device to extract the audio signal from your HDMI source (like a Blu-Ray player) and redirect it for use via an SPDIF TOSLINK optical cable, SPDIF RCA cable, or a 3.5mm to 2 x RCA cable for output to an amplifier or home theatre audio system.

- Size: 70(L) x 60(W) x 20(H)mm

AC-1637 **WAS $99.00**

$79.00
SAVE $20

Video Converters

USB to DVI Adaptor

Connect your monitor to the computer via the USB 2.0 port without buying additional graphics cards. Outputs up to 1600 x 1200 at 32bit. Use up to 6 simultaneously to run screen arrays.

- Powered via USB

XC-4879

$69.95

USB to 1080p HDMI

Add an HDMI port to your computer with this convenient adaptor. Simply install the driver, connect the device to your USB 2.0 port then connect to your extra display and away you go.

- Add up to 6 extra displays to a PC (requires 6 adaptors)
- Size: 106(L) x 48(W) x 18(H)mm

XC-4972 Limited stock

$79.95

IR Extenders

Compact Infrared Extender Kit

Control Blu-Ray players, set-top boxes, and other home theatre/audio equipment even if they're hidden behind cabinet walls or other types of enclosures. Allows you to control up to 4 devices without interference.

- Cable length: 3m
- Size: 103(L) x 32(W) x 16.5(H)mm

AR-1828

NEW $59.95

IR Remote Control Extender for Foxtel IQ2

Controls video source devices like set top boxes, a Blu-Ray/DVD player, or even a HDMI switcher from another room. There is a receiver which plugs into the source device and a transmitter which picks up a signal from your remote control and relays it to the receiver.

- Transmission range: up to 50m
- Size: 70(L) x 50(W) x 20(H)mm

AR-1827

NEW $49.95

IR Remote Control Extender

Extend the range of your IR remote control up to 100m. IR commands are sent by the transmitter via 433MHz signal to the receiver in another room. Mains plugpacks for transmitter and receiver included.

- Transmission range: up to 100m
- Size: 100(Dia.) x 120(H)mm

AR-1817 **WAS $49.95**

$34.95
SAVE $15

25WRMS Compact Stereo Amplifier

Simply connect audio to the stereo RCA or 3.5mm line input then connect speakers to the push down spring terminals. Features a 6.5mm mic input, making it ideal for a small office or workshop PA system. Mains adaptor included.

- Power output: 2 x 25WRMS
- Output impedance: 4 to 8 ohms
- Size: 216(W) x 65(H) x 150(D)mm

AA-0486 **WAS $99.95**

$89.95
SAVE $10

Ultra Slim LED/LCD Tilting Wall Mounts

Ultra thin tilting wall brackets for LED/LCD TVs allow 15° of tilt and mount only 19mm from the wall. Heavy duty steel construction. Mounting hardware and instructions included.

- Load capacity up to 25kg
- VESA standard compliant

For 23" - 55" LCD/LED TV Sets CW-2836 $39.95

For 40" - 65" LCD/LED TV Sets CW-2838 $49.95

FROM $39.95

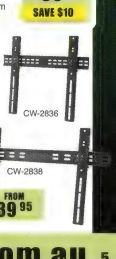

LED

Solid LED Driving/Floodlights

Extremely bright and rugged lights for off-road applications. IP68 water and dust proof rated, die cast aluminium main body, unbreakable Lexan lens, stainless steel fasteners, 7 CREE® XM-L LEDs and high grade electronic control circuitry. Supplied with a 2m wire harness with waterproof connector, and 2 bracket options to suit different applications. Sold individually.

- IP68 waterproof
- 6300 lumens
- 50,000 hour life
- Beam distance: SL-3920: 523m
  SL-3922: 210m

Two versions available:

Driving Light	SL-3920	$219.00
Flood Light	SL-3922	$219.00

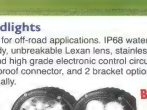

SL-3920 SL-3922

BUY 2 for $398
SAVE $40

NEW
$219.00 EA

Solid LED Light Bar for 4WD/Marine

Waterproof and shock proof LED light bar for 4WD or marine use. Extremely high light output and feature a near unbreakable 100% optically clear polycarbonate front lens cover. Supplied with alloy mounting feet, stainless steel hardware, and a wiring harness with remote rocker switch and relay.

$339.00
SAVE $10

- 50,000+ hour life span
- 10° 60W with 20 LEDs (4340 Lumens)
- Size: 290(L) x 85(W) x 90(H)mm

SL-3914 **WAS $349.00**

LED Torch with Telescopic Neck

A pen-sized torch with super bright LEDs and magnetic head for picking up objects. Extendable to 546mm and gooseneck at the end allows light to be shone around corners, into cracks and crevices.

$12.95

- Includes 4 x LR44 batteries
- Size: 165mm long to 546mm extended

ST-3463

Low Cost LED Work Light

Virtually shatterproof LED worklight. Contains 60 superbright LED's housed in a polycarbonate lens. IP65 rated with PVC casing. Comes with a 3m curly cord with a cigarette lighter plug.

- 12VDC
- 450mm Long + Hook

ST-3264

NEW
$29.95

Multi-Function LED Torch

A handy emergency LED torch/radio/mobile phone charger to when camping or outdoors. Charge the internal battery using a USB power source, built-in solar panel, or hand crank dynamo.

- Size: 135(L) x 64(W) x 40(D)mm

ST-3358

NEW
$39.95

Bike LED Head Torch

Providing up to 700 lumens of intense white light, this head torch is the ideal safety addition for any cyclist. Mains charger included.

- T6 CREE® LED
- Includes handle bar bracket
- Modes: High, low, flashing
- Size: 60(L) x 46(Dia.)mm

ST-3464

$99.00

IP68 Solid Mini LED Spot/Floodlight

Amazingly bright, completely shock and waterproof, and unbelievably compact LED spot/flood lights that are an all-round solution for so many different applications such as reversing lights or side lights on your 4WD. Made from powder coated aluminum alloy casing.

- IP68 rated
- 50,000 hour life
- 12 - 24V
- 500 Lumens light output
- Size (mounted): 70(H) x 40(W) x 55(D)mm

$59.95 EA

Floodlight	**Spotlight**
• Beam distance: 50m	• Beam distance: 145m
SL-3915 $59.95	SL-3916 $59.95

SL-3915 SL-3916

Jaycar - No. 1 for Kits!

$29.95

Garbage and Recycling Reminder Kit

Ref: Silicon Chip Mag Jan 2013

Easy to build kit that reminds you when to put which bin out by flashing the corresponding brightly coloured LED. Up to four bins can be individually set to weekly, fortnightly or alternate week or fortnight cycle. Kit supplied with silk-screened PCB, black enclosure (83 x 54 x 31mm), pre-programmed PIC, battery and PCB mount components.

- PCB: 75 x 47mm

KC-5518

Mains Timer Kit for Fans and Lights

Ref: Silicon Chip Mag Aug 2012

This simple circuit provides a turn-off delay for a 230VAC light or a fan, such as a bathroom fan set to run for a short period after the switch has been tuned off. The circuit consumes no stand by power when load is off. Kit supplied with PCB, case and electronic components. Includes 100nF capacitor for 1 min to 20 mins. See website for a list of alternate capacitors for different time periods between 5 seconds to 1 hour.

- Handles loads up to 5A
- PCB: 60 x 76mm

KC-5512

$39.95

YOUR LOCAL JAYCAR STORE - Free Call Orders: 1800 022 888

• AUSTRALIAN CAPITAL TERRITORY

Belconnen	Ph (02) 6253 5700
Fyshwick	Ph (02) 6239 1801

• NEW SOUTH WALES

Albury	Ph (02) 6021 6788
Alexandria	Ph (02) 9699 4699
Bankstown	Ph (02) 9709 2822
Blacktown	Ph (02) 9678 9669
Bondi Junction	Ph (02) 9369 3899
Brookvale	Ph (02) 9905 4130
Campbelltown	Ph (02) 4620 7155
Castle Hill	Ph (02) 9634 4470
Coffs Harbour	Ph (02) 6651 5238
Croydon	Ph (02) 9799 0402
Erina	Ph (02) 4365 3433
Gore Hill	Ph (02) 9439 4799
Hornsby	Ph (02) 9476 6221
Liverpool	Ph (02) 9821 3100
Maitland	Ph (02) 4934 4911
Newcastle	Ph (02) 4965 3799
Penrith	Ph (02) 4721 8337
Port Macquarie	Ph (02) 6581 4476
Rydalmere	Ph (02) 8832 3120
Sydney City	Ph (02) 9267 1614
Taren Point	Ph (02) 9531 7033
Tuggerah	Ph (02) 4353 5016
Tweed Heads	Ph (07) 5524 8566
Wagga Wagga	Ph (02) 6931 9333
Warners Bay NEW	Ph (02) 4954 8100
Wollongong	Ph (02) 4226 7089

• NORTHERN TERRITORY

Darwin	Ph (08) 8948 4043

• QUEENSLAND

Aspley	Ph (07) 3863 0099
Browns Plains NEW	Ph (07) 3800 0877
Caboolture	Ph (07) 5432 3152
Cairns	Ph (07) 4041 6747
Caloundra NEW	Ph (07) 5491 1000
Capalaba	Ph (07) 3245 2014
Ipswich	Ph (07) 3282 5800
Labrador	Ph (07) 5537 4295
Mackay	Ph (07) 4963 0611
Maroochydore	Ph (07) 5479 3511
Melmaid Beach	Ph (07) 5526 6722
Nth Rockhampton	Ph (07) 4926 4155
Townsville	Ph (07) 4772 5022
Strathpine NEW	Ph (07) 3889 6910
Underwood	Ph (07) 3841 4888
Woolloongabba	Ph (07) 3393 0777

• SOUTH AUSTRALIA

Adelaide	Ph (08) 8231 7355
Clovelly Park	Ph (08) 8276 6901
Elizabeth	Ph (08) 8255 6999
Gepps Cross	Ph (08) 8262 3200
Reynella	Ph (08) 8387 3847

• TASMANIA

Hobart	Ph (03) 6272 9955
Launceston	Ph (03) 6334 2777

• VICTORIA

Cheltenham	Ph (03) 9585 5011
Coburg	Ph (03) 9384 1811
Ferntree Gully	Ph (03) 9758 5500
Frankston	Ph (03) 9781 4100
Geelong	Ph (03) 5221 5800
Hallam	Ph (03) 9796 4577
Kew East	Ph (03) 9859 6188
Melbourne	Ph (03) 9663 2030
Ringwood	Ph (03) 9870 9053
Roxburgh Park NEW	Ph (03) 8339 2042
Shepparton	Ph (03) 5822 4037
Springvale	Ph (03) 9547 1022
Sunshine	Ph (03) 9310 8066
Thomastown	Ph (03) 9465 3333
Werribee	Ph (03) 9741 8951

• WESTERN AUSTRALIA

Joondalup	Ph (08) 9301 0916
Maddington	Ph (08) 9493 4300
Mandurah	Ph (08) 9586 3827
Midland	Ph (08) 9250 8200
Northbridge	Ph (08) 9328 8252
Rockingham	Ph (08) 9592 8000

Arrival dates of new products in this flyer were confirmed at the time of print but delays sometimes occur. Please ring your local store to check stock details. Savings off Original RRP.

Prices valid from 24th September 2013 to 23rd October 2013.

HEAD OFFICE
320 Victoria Road, Rydalmere NSW 2116
Ph: (02) 8832 3100 Fax: (02) 8832 3169

ONLINE ORDERS
Website: www.jaycar.com.au
Email: techstore@jaycar.com.au

Occasionally there are discontinued items advertised on a special / lower price in this promotional flyer that has limited to nil stock in certain stores, including Jaycar Authorised Stockist. These stores may not have stock of these items and can not order or transfer stock.

Narrow Band Digital Two-Way Radio

by Kevin Poulter*

Like just about everything else in the 21st Century, professional two-way radio is making the transition from analog to digital. As well as potentially much clearer signals and more users in the same amount of spectrum, digital two-way radio offers many other advantages.

* on behalf of ICOM Australia

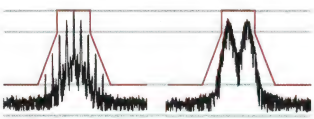

Fig.1: the older 12.5kHz-wide analog signal (on the left) occupies the same amount of bandwidth as two 6.25kHz digital signals (right). These can co-exist without interfering with each other.

Towards the end of last century, the growing demand for radio frequency spectrum in the "Land Mobile" UHF professional two-way radio band forced a change from the original 100kHz separation between users down to 25kHz separation. But even this wasn't enough to accommodate the ever-increasing demand.

In the USA, the FCC mandated that all professional telecommunications equipment have a separation of just 12.5kHz by January 1, 2013, and Australia's Communications and Media Authority (ACMA) followed suit.

However, it's widely expected that before too long, even this will be too wide and a separation between channels of just 6.25KHz will be required.

Modern radio equipment, such as that made by Icom, already has this capability built in.

Going digital

Narrowbanding, as it is called, was the ideal opportunity for transceivers to also migrate from analog transmissions to digital. Not only does this enable many more users in the available spectrum, but it also enables improved noise rejection and voice quality over a greater distance.

Much clearer (and therefore intelligible) conversations are especially evident at the limits of the transmission range, with none of the analog background noise.

But digital transmission has a number of other benefits, such as the ability to further clarify speech by looking for waveform patterns which match an internal library of speech waveforms. Any other patterns – such as noise and even wind noise in the microphone - are assumed to be noise and are nulled out.

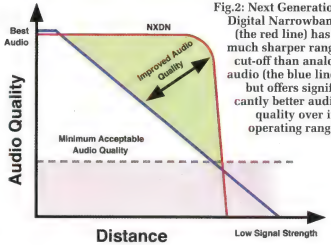

Fig.2: Next Generation Digital Narrowband (the red line) has a much sharper range cut-off than analog audio (the blue line) but offers significantly better audio quality over its operating range.

Co-existing with analog

With so many millions of dollars invested in analog radio equipment, many organisations would be most reluctant to replace their current system, digital advantages notwithstanding.

For this reason, Icom developed a "mixed mode" system whereby analog and digital can co-exist and be used in parallel until the user is ready to replace old gear.

For example, a leading Australian hospital currently has made the switch to digital inside the building but their security contractor still uses analog mobiles on the same channel. Both are received simultaneously with the system automatically adjusting and replying in the transmission mode in use.

The same hardware – antennas, power supplies, duplexers, isolators and combiners can be used with both systems, so the only cost is adding digital transceivers as and when required.

Next Generation Digital Narrowband

A joint technical alliance between Icom and JVC Kenwood developed Next Generation Digital Narrowband

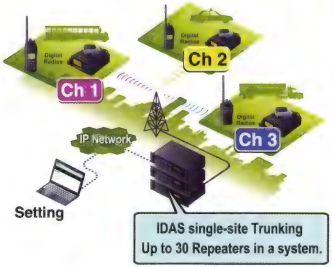

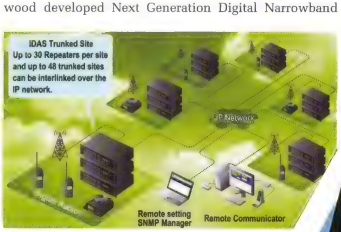

IDAS single-site trunking (left) is for relatively sma area use, with individual sites only able to comm with units on their site. By contrast, multi-site tr (above) can handle up to 48 sites, each with 30 Communication is via an IP network and site virtually anywhere – even on the other side

(NXDN) technology, an open protocol. Two 6.25kHz digital narrowband signals can be used next to each other within a 12.5kHz channel without causing interference to each other or adjacent channels.

Internet connection

Icom's Digital Advanced System (IDAS) has a network interface which can be connected to a LAN or the internet. Communication range is vastly extended by talking through IP (internet protocol), eliminating the need for costly RF links or leased lines for "off site" communication. Hence, "off site" can be anywhere from the next street to the other side of the world.

Trunking systems

Insufficient spectrum, increased radio usage and budget limitation often mean there are insufficient channels available for users in large groups to have their own frequency.

"Trunking" is a commonplace solution to this problem, where many users share relatively few radio channels and calls are automatically "routed" via a central computer. They are divided into "talkgroups" and the computer finds a vacant channel to allow the communication to proceed.

Icom's digital transceivers are capable of a variety of modes of trunking, with their "MultiTrunk system allowing from one to thirty channels per site, with up to 16 sites. All channels can be used for voice or data and a priority system allows emergency communication interruption.

Coding, decoding and scrambling

Digital communication allows advanced coding, with CTCSS, (Continuous Tone-Coded Squelch System), DTCS (Digital Tone Code Squelch) and RAN (Random Access Number) coding on a per-channel basis. This allows the channel to be shared with multiple users, only springing to life when the code appropriate to the called station is received.

Similarly, scrambling (for secure communication) is particularly suited to digital mode, without the significant loss of voice quality that analog scrambling can cause. In IDAS digital mode, a 15-bit encryption key can also be programmed, for over 32,000 scrambling codes.

Easy programming

Another feature of the digital age is quick and easy programming on site, from a suitably equipped PC. Features such as selective calling, status message, radio stun/kill/revive (useful when equipment is stolen) and even GPS position reporting can be programmed into the system. Professional Telecommunications Narrow Band Digital has a host of features, far more than can be summarised here. If you'd like to know more, and see how the ICOM range fits into digital radio, visit www.icom.net.au SC

Icom's Digital Handheld transceiver has 512 memory channels with 128 zones, IDAS and NXDN features, GPS receiver, man down function, waterproof to IP67 standard and 800mW audio output power.

A low cost, high-quality audio amplifier – ideal for flat panel TVs, MP3s and more!

Part 1 – By Leo Simpson & Nicholas Vinen

"TINY TIM" Stereo Amplifier

Most flat panel TVs have mediocre sound quality from their tiny inbuilt downward firing loudspeakers. So how do you get better sound? The short answer is that you need a good quality stereo amplifier with either a Toslink or S/PDIF digital input and some decent speakers. Our solution is to adapt the quality headphone amplifier from the September 2011 issue, increasing its power to around 10 watts per channel and adding digital inputs.

Elsewhere in this issue we have featured the Tiny Tim loudspeaker system which is based on a 4-inch wide-range driver in an unusual horn-loaded cabinet. It only requires modest power to drive it to more than adequate sound levels.

Combined with the amplifier described here, it is ideal for that purpose: for TV viewing or for a high quality music system in a small living room, study or bedroom.

When we published the high quality headphone amplifier in the September 2011 issue we did indicate that it could comfortably drive 8-ohm loads to quite respectable power levels, more than 4W, at very low distortion. However, it was only equipped with a front panel headphone socket so you would have to use some sort of cable adaptor to connect the speakers to the socket. As a result, very few readers have probably bothered to do so but simply used it with headphones alone.

That is unfortunate because it really is a very good performer, rivalling the sound quality of our now-famous Ultra-LD series amplifiers.

But few people would bother to build a stereo amplifier capable of many hundreds of watts merely to listen to their TV; it would be over-kill. So that is part of the reasoning behind this project: to give the headphone amplifier a boost in power output to around 10 watts per channel while still retaining its very low distortion.

At the same time, we are teaming it with a compact commercial DAC (digital-to-analog converter) to provide the required Toslink or S/PDIF input.

The Tiny Tim amplifier uses the same PCB as our high-quality headphone amplifier (September 2011) but has several component changes to allow it to produce around 10W per channel. Full construction details, including PCB component layout, will be published next month.

While this isn't as good as our own CLASSiC DAC project (SILICON CHIP, February, March & April 2013), it still has respectable performance while being significantly cheaper and much more compact.

Elsewhere in this article are the performance specifications of the completed amplifier and a number of graphs illustrating its frequency response, harmonic distortion versus frequency and so on.

Compact case

One of the problems we have with presenting small projects such as this is sourcing suitable small cases which look good and are not frightfully expensive.

For this project, we are taking the recycling approach and it involves using the case from a digital set top box which recently failed. The compact case is a good size and readily accommodates the headphone amplifier PCB, a small DAC and a 30VA (or 20VA) toroidal power transformer.

No doubt other cases from compact DVD or CD players could also be pressed into service. In fact, some readers might take the approach of buying a set top box and removing the innards, just to get a cheap metal case.

Either way, you should be able to use some of the existing hardware such as the power cord and power switch. That is what we were able to do.

We removed the existing PCBs from the STB case, a job which only took a few minutes. Then we unclipped the plastic front panel section so that we could do some surgery to it. This involved cutting away a section which was evidently provided for a model with some sort of card reader. We needed to do this as it would otherwise have interfered with the amplifier PCB. We also wanted to remove all of the existing screen-printed labelling. This was a matter of judicious cleaning with mineral turps.

This slightly dulled off the shiny finish of the panel but it was easily restored with a light car polish.

We then installed a dual gang volume control and a 6.5mm stereo headphone socket. This socket would allow headphones to be used instead of loudspeakers with automatic switching to turn the speakers off if a headphone jack plug was inserted. We also added a LED as a power indicator.

Main Features

- **Easy to build**
- **Uses common, low-cost parts**
- **Suits 4-8Ω speakers, 8-600Ω headphones and ear buds**
- **Very low distortion and noise**
- **Short-circuit protected**

Specifications *(bandwidth 20Hz-22kHz unless otherwise stated; see Figs.1-4)*

Output power, 8Ω (THD+N < 0.01%): 2 x 8W
Output power, 4Ω (THD+N < 0.01%): 2 x 6.5W
Music power, 4Ω / 8Ω : 10W
THD+N: <0.0006% @ 1kHz/1W
Signal-to-noise ratio: -120dB unweighted with respect to 10W
Frequency response: ±0.15dB, 20Hz-20kHz
Channel separation: 100dB @ 100Hz, 83dB @ 1kHz, 63dB @ 10kHz
NB: Power measurements made with a 20VA toroidal power transformer; the alternative 30VA transformer would be expected to produce slightly higher power figures.

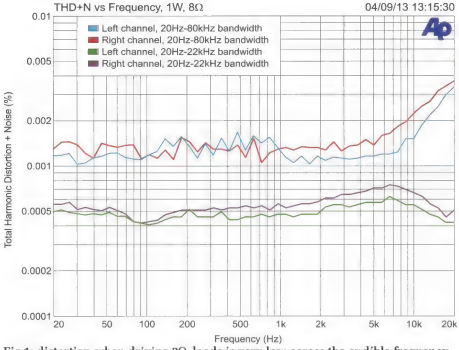

Fig.1: distortion when driving 8Ω loads is very low across the audible frequency range. The two lower curves include a realistic noise level however they do not show the rising distortion with frequency. The upper two curves do show this but the inaudible noise between 20kHz and 80kHz increases the overall readings.

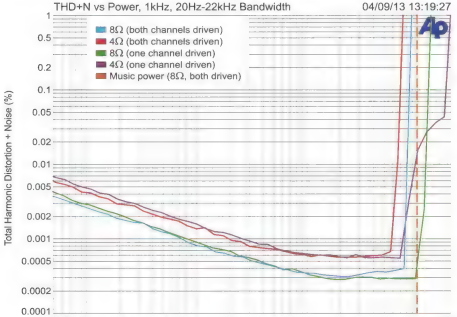

Fig.2: distortion is slightly better driving 8Ω loads than 4Ω although the latter still gives a very respectable result. Distortion drops with level as the signal increases above the noise until the onset of clipping. Slightly more power is available with one channel driven than both due to power supply limitations (20VA transformer used).

Inside the case we have mounted the PCB for the above-mentioned amplifier, the compact DAC and a 20VA toroidal power transformer plus a rectifier and filter capacitors on a small secondary board. But before describing the internal details, we need to describe the modified headphone amplifier circuit.

Modified headphone amplifier circuit

The main changes to the circuit involve the just-mentioned transformer which is part of a beefed up power supply in place of the original 12VAC 1A or 2A plugpack. Briefly, the other changes include increasing the capacitance of the power supply filter capacitors; increasing the voltage rating of other electrolytic capacitors from 25V to 50V, increasing the drive to the output transistors and increasing the gain of the power amplifiers.

Rather than just describe the changes, we will give details of the complete circuit, for the benefit of readers who may not have seen the article in the September 2011 issue.

Fig.5, the complete circuit, shows both channels. It is split into two sections, with the preamplifiers and power supply on the lefthand side and the power amplifiers on the righthand side.

The preamplifier for each channel is based on three op amps in a classic Baxandall design so three LM833 dual op amps are used. The preamplifier is inverting and has a gain range from zero to -7.

The Baxandall preamplifier circuit has the advantage that it varies its gain according to the setting of potentiometer VR1. As a result, the residual noise level is kept low at the low gain settings most commonly required. Like a traditional preamplifier, its gain can go all the way down to zero and up to some fixed number, in this case, -7, with the minus sign indicating that it inverts the signal.

The two power amplifiers on the righthand side of the circuit are very similar to the 20W Class-A Amplifier (Silicon Chip, May & June 2007) but with smaller output transistors and tiny heatsinks. The power amplifiers invert the signal again, so the unit's outputs and inputs are in-phase. Since there is so much gain available in the preamps, the power amplifiers operate with low gain, (ie, -1.83). This improves the noise performance and maximises the feedback factor, keeping distortion exceedingly low even with run-of-the-mill output transistors.

Since the headphone connector is a jack socket, the outputs can be briefly short-circuited by the plug if it is inserted or removed during operation. Because of this possibility, the design incorporates short-circuit protection to prevent any damage.

Common mode distortion

By lowering the gain, we get a higher

feedback factor (which is good) but we also increase the possibility of common-mode distortion. This can reduce the effectiveness of a high feedback factor so that the distortion reduction (due to the feedback) is not as much as would otherwise be the case.

While the differential input voltage (ie, the voltage between the two inputs) of an amplifier operating in closed loop mode is very small, both input voltages can still have large swings, especially when the amplifier is being driven hard. This is the "common mode" signal, ie, signal common to both inputs.

For a non-inverting amplifier, the common mode voltage is the output voltage swing divided by the closed loop gain. So at low gain, the common mode signal amplitude is similar in magnitude to the output signal amplitude, which for our amplifier can be around 28V peak-to-peak. Typically, if the common mode signal exceeds 1-2V RMS, common mode distortion can become the dominant distortion mechanism, marring its performance.

This is due to "Early effect" in the input transistors (named after James M. Early of Fairchild Semiconductor). This is caused by the effective width of the transistor base junction varying with its collector-base voltage (see **www.wikipedia.org/wiki/Early_effect**).

If the common mode voltage is large enough, the result is modulation of the input transistors' beta (or gain) and this reduces the overall linearity of the amplifier. These non-linearities cannot be corrected by negative feedback since they occur in the input stage.

The solution is to use an inverting amplifier, as we have in this case. Its non-inverting input is connected to ground and so the inverting input is held at "virtual ground" too, regardless of the output voltage. This configuration has so little common mode voltage that it can't suffer from common mode distortion.

To make a power amplifier inverting, we rearrange the feedback network in the same manner as we would with an op amp. In fact, common mode distortion in op amps can be reduced using the same method.

The main disadvantage of the inverting configuration is that the input impedance is low, as determined by the resistor from the signal source to the inverting input. For good noise performance, its value must be low (minimising its Johnson-Nyquist thermal noise – again, see **www.wikipedia.org/wiki/Johnson_nyquist_noise**). In this case, the preamplifiers provide the amplifiers with a low source impedance, so it isn't a problem.

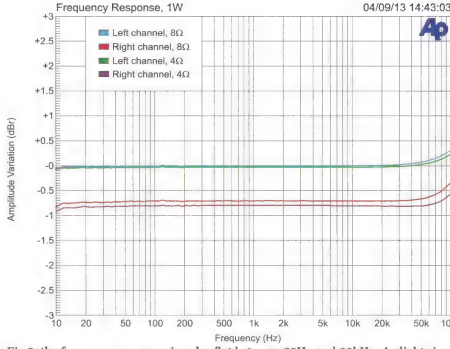

Fig.3: the frequency response is ruler-flat between 20Hz and 20kHz. A slight rise is evident above 20kHz due to the RLC output filter however this drops off at frequencies above 100kHz (not shown). The difference in left and right channel level is due to the tracking error in the pot, which is less than 1dB across much of the range of the pot.

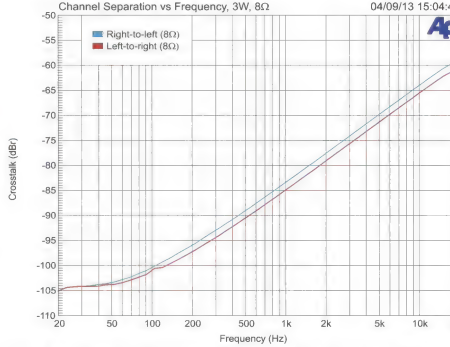

Fig.4: channel separation vs frequency, with a higher value being better. This is better driving speakers (shown here) than headphones because speakers do not have a shared ground return path. The coupling between channels is mostly capacitive, hence separation is better at lower frequencies.

No driver transistors

If you compare the amplifier circuits to our previously published amplifier designs such as the Ultra-LD Mk.3 or 20W Class-A Amplifier, you will find many similarities.

As with the Ultra-LD Mk.3 ampli-

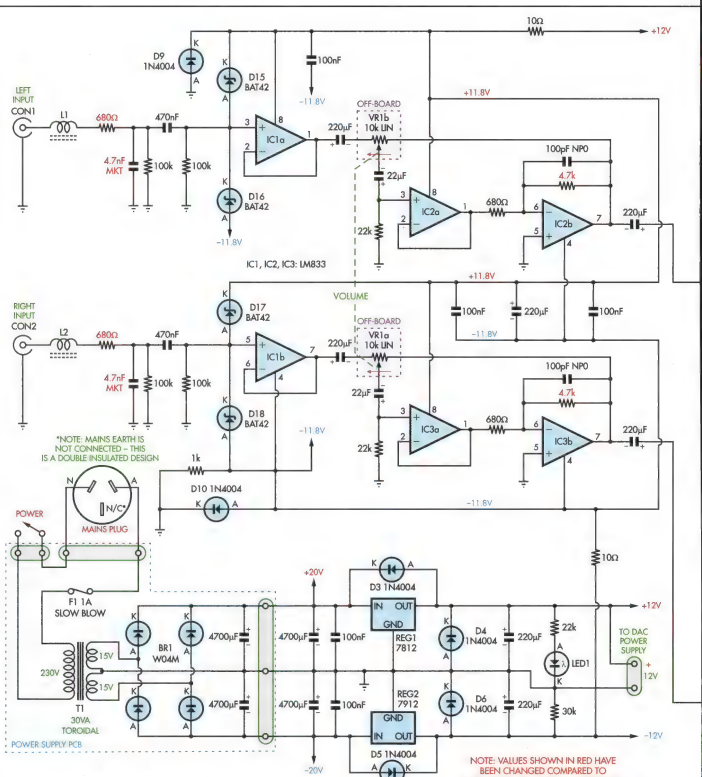

SC 2001 TINY TIM 10W STEREO AMPLIFIER

Fig.5: The full circuit for the Tiny Tim Amplifier, including the mains power supply (lower left) which is built on a separate PCB. The onboard preamp is shown at upper left and this provides gain control and buffering to drive the power amplifiers, at right. These are based around a TIP31/TIP32 complementary transistor pair without driver transistors, driven by a more-or-less conventional front end. The supply voltage has been increased compared to the original headphone amplifier design and some of the component values have been changed to increase gain and current delivery, hence available power.

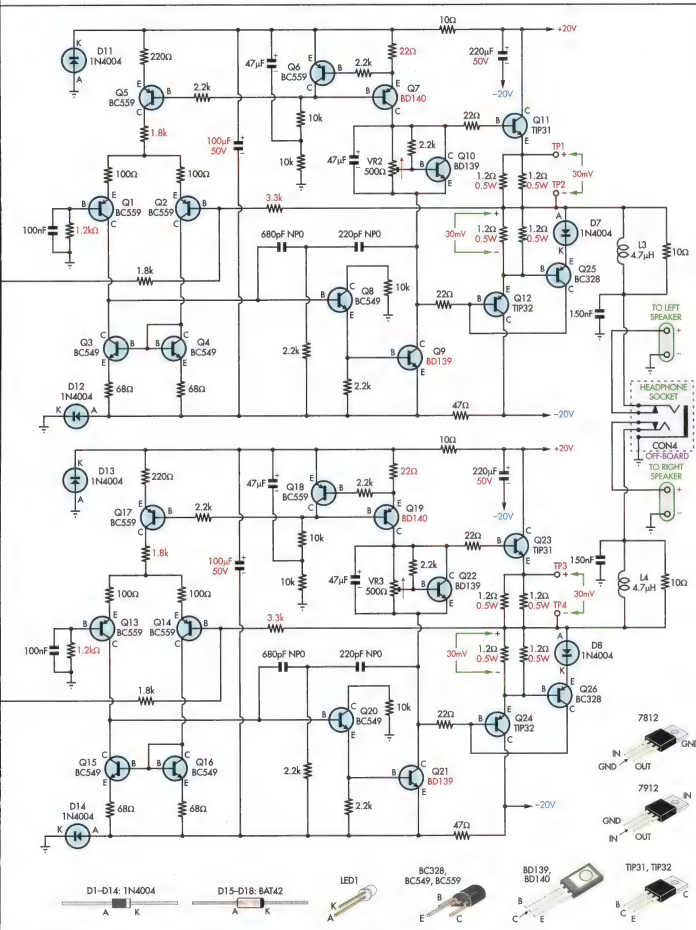
+20V
-20V
D11 1N4004
D12 1N4004
D13 1N4004
D14 1N4004
Q1 BC559
Q2 BC559
Q3 BC549
Q4 BC549
Q5 BC559
Q6 BC559
Q7 BD140
Q8 BC549
Q9 BD139
Q10 BD139
Q11 TIP31
Q12 TIP32
Q13 BC559
Q14 BC559
Q15 BC549
Q16 BC549
Q17 BC559
Q18 BC559
Q19 BD140
Q20 BC549
Q21 BD139
Q22 BD139
Q23 TIP31
Q24 TIP32
Q25 BC328
Q26 BC328
D7 1N4004
D8 1N4004
VR2 500Ω
VR3 500Ω
TP1
TP2
TP3
TP4
30mV
L3 4.7μH
L4 4.7μH
TO LEFT SPEAKER
HEADPHONE SOCKET
CON4
OFF-BOARD
TO RIGHT SPEAKER
7812
7912
IN
GND
OUT
D1–D14: 1N4004
D15–D18: BAT42
LED1
BC328, BC549, BC559
BD139, BD140
TIP31, TIP32

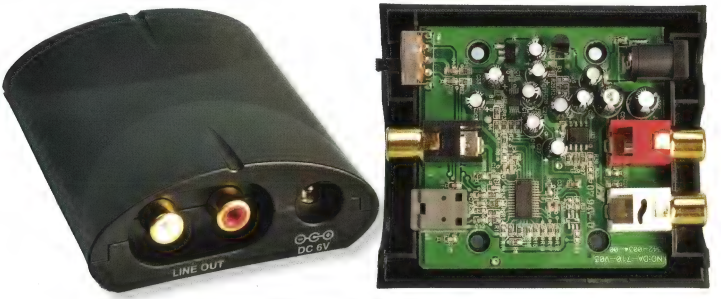

Here's the integrated DAC we used, outside and inside. It comes from Jaycar Electronics. While you *could* use our CLASSiC DAC, it is much more expensive and would be overkill in this project.

fier, this design uses 2-pole frequency compensation. As a result, the Tiny Tim amplifier has particularly low distortion at high frequencies. For a detailed explanation of the advantages of 2-pole compensation, refer to the article published in the July 2011 issue on "Amplifier Compensation and Stability".

The main difference is that the two output transistors are driven directly from the voltage amplification stage (VAS), with no driver transistors in between. This design decision is due to the original application of the amplifier being for headphones, where the current requirements are quite small and thus the Class-A VAS is easily able to supply it.

This is still a feasible configuration for a 10W-per-channel amplifier but we have had to increase the VAS standing current to around 30mA, by using a 22Ω resistors at the bases of transistors Q7 and Q19.

Happily, the TIP31 and TIP32 output transistors have quite a good beta figure which drops as the collector current increases. For 10W output we need a peak output current of 1.65A and their beta at this sort of current is around 55. 1.65A ÷ 55 = 30mA, hence our choice of the 22Ω resistors. It's only just enough current but we don't want to use too much of the available power up in the driver stage.

The TIP31 (NPN) and TIP32 (PNP) transistors are readily available and rated at 3A and 40W each; sufficient for our needs in this circuit.

How it works

Let's start with the preamp stages and since both channels are identical, we will just describe the left channel. Any RF signals or ultrasonic noise picked up by the input leads are attenuated by a low-pass filter consisting of a ferrite bead, a 680Ω resistor and a 4.7nF capacitor. The ferrite bead acts like an inductor to block RF. The signal is then coupled via a 470nF capacitor to pin 3 of op amp IC1a which is configured as a voltage follower. This provides a low source impedance to the preamp gain stages comprising IC2a & IC2b.

IC1a's output is fed to the following stage via a 220µF electrolytic capacitor. This large value ensures good bass response and avoids any distortion that may arise from the typical non-linearity of an electrolytic capacitor with a significant AC voltage across it.

The signal passes to the non-inverting input of IC2a (pin 3) via volume control potentiometer VR1 and a 22µF electrolytic capacitor. This capacitor ensures there is no DC flowing through VR1, which would otherwise cause a crackling noise when it is rotated.

IC2a buffers the voltage at the wiper of VR1 to provide a low impedance for inverting amplifier IC2b. IC2b has a fixed gain of 7, set by the 4.7kΩ and 680Ω resistors. The 100pF feedback capacitor is there to improve circuit stability and reduce high-frequency noise.

Volume potentiometer VR1 is part of the feedback network from the output from IC2b to the input at the 220µF capacitor (from pin 1 of IC1a). Hence IC2a & IC2b form a feedback pair with the overall gain adjustable by VR1.

When VR1 is rotated fully anti-clockwise, IC2b's output is connected directly to VR1b's wiper. Thus IC2b is able to fully cancel the input signal (as there is zero impedance from its output to the wiper) and the result is silence (no output signal) from the preamplifier.

Conversely, when VR1 is fully clockwise, VR1b's wiper is connected directly to the input signal, which is then amplified by the maximum amount (7 times) by IC2b. At intermediate settings, the signal at the wiper is partially cancelled by the mixing of the non-inverted (input) and inverted (output) signals and the resulting gain is intermediate.

The way in which this cancellation progresses as VR1 is varied provides a quasi-logarithmic gain curve.

IC1 needs input protection

Because the amplifier may be turned off when input signals are present, IC1's input transistors can be subjected to relatively high voltages; up to 2.5V RMS or maybe 7V peak-to-peak. This will not damage IC1 immediately but over many years, it could degrade the performance.

This is because normally very little current flows through the op amp inputs and so the metal traces within the IC are thin. If enough current passes through the inputs (5mA or more), "metal migration" can cause degrada-

tion and ultimately failure.

For that reason we have included small-signal Schottky diodes D15 & D16 to protect pin 3 of IC1a (and D17 & D18 for pin 5 of IC1b) when the unit is switched off but a large signal is applied.

They clamp the voltage at that input to within ±0.3V of the supply rails under normal conditions, preventing current flow through the op amp input transistors should their junctions be reverse-biased.

So if the unit is off and the supply rails are zero, the input voltages will be similarly limited to ±0.3V.

The BAT42 diodes have been carefully selected to clamp the op amp input voltages appropriately without having so much leakage current that they will introduce distortion into the signal (Schottky diodes normally have a much higher reverse leakage current than standard silicon diodes). For more information on protecting op amp inputs, see Analog Devices tutorial MT-036, "Op Amp Output Phase-Reversal and Input Over-Voltage Protection".

We also tested BAT85 diodes (Altronics Z0044). These have slightly higher capacitance when reverse-biased (10pF compared to 7pF) and a significantly higher reverse leakage current (400nA at -15V/25°C compared to 75nA).

However, testing shows no measurable increase in distortion with these in place of the BAT42s so they are an acceptable substitute.

Amplifier circuit

Low-noise PNP transistors Q1 & Q2 are the differential input pair, with the base of Q1 being the non-inverting in-

Parts List – Tiny Tim 10W Stereo Amplifier

1 integrated DAC (Jaycar AC-1631)
1 Mini-Reg kit or PCB & parts (Silicon Chip, Dec 2011)
1 PCB, code 01309111, 198 x 98mm
1 vented metal case, 250 x 220 x 45mm or larger#
1 PCB-mount 6.35mm switched stereo jack socket (3PDT) (CON4)
6 PCB-mount 6021-type flag heatsinks (Element14 Order Code 1624531; Jaycar HH8504, Altronics H0637)
1 2.5mm DC power plug
6 M3 x 10mm screws and nuts
8 TO-220 insulating washers
6 TO-220 insulating bushes
6 PCB pins
8 M3 x 9mm tapped Nylon spacers
16 M3 x 6mm machine screws
1 35 x 15mm section of tin plated steel (eg, cut from a tin can)
3 8-pin DIL sockets (optional)
2 small ferrite beads
4 insulated binding posts: 2 red, 2 black
2 RCA plugs
2 plastic former bobbins (Jaycar LF1062, Altronics L5305)
1 2m length 0.8mm diameter enamelled copper wire
1 25mm length 25mm diameter heatshrink tubing
1 1m length light duty figure-8 cable
1 500mm length 2-core shielded cable
1 250mm length 4-core shielded cable
1 1m length red medium-duty hook-up wire
1 1m length black medium-duty hook-up wire
1 250mm length blue medium-duty hook-up wire

Semiconductors
3 LM833 dual low noise op amps (IC1-IC3)
1 7812 positive 12V linear regulator (REG1)
1 7912 negative 12V linear regulator (REG2)
2 TIP31 3A NPN transistors (Q11, Q23)
2 TIP32 3A PNP transistors (Q12, Q24)
4 BD139 1.5A NPN transistors (Q9, Q10, Q21, Q22)
2 BD140 1.5A PNP transistors (Q7, Q19)
2 BC328 PNP transistors (Q25, Q26)
6 BC549 NPN transistors (Q3-Q4, Q8, Q15-Q16, Q20)
8 BC559 PNP transistors (Q1-Q2, Q5-Q7, Q13-Q14, Q17-Q19)
1 5mm LED (LED1)
12 1N4004 1A diodes (D3-14)
4 BAT42 Schottky diodes (D15-D18) (***or*** use BAT85, Altronics Cat. Z0044)#

Capacitors
2 4700µF 25V electrolytic
2 220µF 50V electrolytic*
7 220µF 25V electrolytic*
2 100µF 50V electrolytic*
4 47µF 16V electrolytic*
2 22µF 16V electrolytic*
2 470nF MKT
2 150nF MKT
7 100nF MKT
2 4.7nF MKT
2 680pF C0G/NP0 ceramic
2 220pF C0G/NP0 ceramic
2 100pF C0G/NP0 ceramic

** Low ESR 105° types preferred if their diameter is no more than 6.3mm for 22µF/47µF and 8mm for 100µF/220µF.*

 # See text

Resistors (0.25W, 1%)

4 100kΩ	1 30kΩ	3 22kΩ	6 10kΩ	2 4.7kΩ	2 3.3kΩ
10 2.2kΩ	4 1.8kΩ	2 1.2kΩ	1 1kΩ	4 680Ω	2 220Ω
4 100Ω	4 68Ω	2 47Ω	6 22Ω	6 10Ω	

8 1.2Ω (0.5W, 5%)
1 10kΩ dual gang linear 16mm potentiometer. with knob (VR1)
2 500Ω sealed horizontal trimpots (VR2, VR3)

Power supply board

1 PCB, coded 18110131, 75 x 100mm
1 30VA 15+15VAC toroidal transformer (Altronics M-4915A) ***or***
1 20VA 15+15VAC toroidal transformer (Jaycar MT-2086)
1 M205 fuse holder with clip-on cover
1 1A slow-blow M205 fuse
2 3-pin headers, 3.96mm pitch, with centre pin removed #
1 250VAC switch with double-sheathed lead and sheathed terminals, terminated with 3-pin, 3.96mm pitch header plug #
1 twin core mains lead, double-sheathed and terminated with 3-pin, 3.96mm pitch header plug #
1 3-way terminal block
4 M3 x 9mm tapped Nylon spacers
8 M3 x 6mm machine screws
1 W04M 1.5A bridge rectifier (BR1)
2 4700µF 25V electrolytic capacitors
2 10kΩ 0.25W 5% resistors

put to the amplifier and the base of Q2 being the inverting input. Q1's base is tied to ground by a 1.2kΩ resistor (to match the 1.16kΩ source impedance at the base of Q2) and is bypassed by a 100nF capacitor to reduce high-frequency noise.

The signal from the preamplifier is fed to the base of Q2 via a 3.3kΩ feedback resistor, so that the amplifier works in the inverting mode. This gives the amplifier stages a gain of -3.3kΩ ÷ 1.8kΩ = -1.83.

PNP transistor Q5 operates as a 3mA constant current source (0.65V ÷ 220) to feed the Q1/Q2 input pair. Negative feedback for current regulation is provided by another PNP transistor, ie, Q6. It has a bootstrapped collector current sink (two 10kΩ resistors and a 47µF capacitor), so that it operates consistently.

NPN transistors Q3 and Q4 form a current mirror for the input pair, with 68Ω emitter resistors to improve its accuracy. Any difference in the current through Q1 and Q2 must then flow to the base of NPN transistor Q8. So Q1-Q5 form the transconductance stage of the amplifier.

Together, Q8 and Q9 form a Darlington transistor, configured as a common-emitter amplifier. PNP transistor Q7 acts as a constant current source for its collector load, sourcing about 30mA (0.65V ÷ 22Ω). Q6 provides current regulation feedback for Q7 as well as Q5.

The 680pF and 220pF capacitors between Q9's collector and Q8's base, together with the 2.2kΩ resistor from their junction to the negative rail, form the 2-pole frequency compensation scheme mentioned earlier. Together, transistors Q7-Q9 are the voltage amplification stage.

Because Q7 and Q9 have to handle significantly more voltage and current in this beefed-up version of the amplifier (compared to the original headphone amplifier circuit), their dissipation has increased beyond the capabilities of the small TO-92 signal transistor package. We calculate their dissipation as around 20V x 30mA = 600mW while the limit of a TO-92 package at 55°C is about 500mW.

As a result, we have had to change them to BD139 & BD140 which are 80W transistors rated at 80V and 1.5A. These are in TO-126 packages which can dissipate just under 1W at 55°C with no heatsink. But they have a different pin-out to those originally specified (ie, BC337/338 and BC549) so it will be necessary to bend their leads when they are installed on the PCB.

You can see how we did this in the photo of the PCB.

V_{BE} multiplier

Between Q7 and Q9 is Q10 (another BD139) which functions as a V_{BE} multiplier to set the quiescent current for the output transistors Q11 & Q12. Q10 is mounted on the back of Q11's heatsink so that its junction temperature tracks the output stage. Thus, its V_{BE} tracks that of the output transistors (Q11 and Q12), so the bias voltage varies to compensate for changing output transistor temperature, keeping the standing current through them more or less constant.

VR2 is used to adjust this current, while the 2.2kΩ resistor prevents the bias from becoming excessive if VR2's wiper goes open-circuit, as it may do while it is being trimmed. A 47µF capacitor filters the bias voltage, improving distortion performance when the output voltage swing is large.

The resulting bias voltage is applied between the bases of output transistors Q11 (NPN) and Q12 (PNP) via 22Ω stopper resistors, which prevent parasitic oscillation. Each output transistor has a 0.6Ω emitter resistor (two 1.2Ω resistors in parallel) which helps to linearise the output stage and stabilise the quiescent current.

Current limiting

While it's always a good idea to plug and unplug the headphones while the power switch is off, we can't rely on that and we don't want the output transistors to blow when it happens. Therefore, both Q11 and Q12 are protected against over-current conditions.

Q11 is current-limited because the 30mA current source (Q7) sets a maximum limit for its base current. According to the TIP31 data sheet, at 25-125°C, the maximum collector current will be about 1.65A, well within its safe operating area (SOA) so as long as the short-circuit is brief.

Q12 is more of a concern because Q9 can sink significantly more than 30mA. The 10kΩ resistor at Q8's collector ultimately limits how much current Q9 can sink as follows. Q8's maximum collector current is around (12V - 0.7V) ÷ (10kΩ + 2.2kΩ) = ~1mA. According to the BC338 data sheet Q9's maximum current gain figure is around 160, so the maximum it can sink is about 160mA.

However, if this much current were pulled from Q12's base then it would fully saturate (turn on hard), exceeding its SOA and possibly causing it to fail. Q25 and D7 prevents this. Should the current flow through Q12's collector-emitter junction exceed 2A (within its SOA), the drop across the 0.6Ω emitter resistor exceeds 2A x 0.6 = 1.2V.

At this point, Q25's base-emitter voltage increases beyond 1.2V - 0.6V = 0.6V and so Q25 starts to turn on, shunting current around Q12's base-emitter junction and preventing Q12 from turning on harder. Any current sunk by Q9 beyond that necessary for Q12 to pass 2A goes through D7 and Q25 rather than Q12's base-emitter junction.

Output RLC filter

The output filter isolates the amplifier from its load at high frequencies, improving stability. Because this amplifier circuit is already fairly stable (thanks to its simple output stage), we can get away with slightly less inductance than usual (4.7µH rather than 6.8µH or 10µH). We can thus use a thinner gauge wire which is slightly easier to wind, for roughly the same DC resistance.

Ideally, the output filter should be optimised for the expected load impedance but because headphones have such a wide range of impedances, all we can do is compromise and specify an intermediate value. As a result, for higher impedance headphones, the amplifier has a slightly elevated response at above 20kHz.

For 4-ohm and 8-ohm loudspeaker operation, the high frequency response is virtually flat and then for higher load impedances, up to infinity, the gain increases to as much as +0.13dB at 20kHz. The increase is slightly lower (+0.09dB) for the most common headphone impedances of 16Ω and 32Ω. This deviation is so small as to be imperceptible.

In fact, all our amplifier designs using this type of output RLC filter (devised by the late audio genius Neville Thiele) have such a response with higher than usual output impedances or no load.

Power supply

We have had to increase the voltage and current of the power supply in order to allow the modified amplifiers to

deliver the target of 10W per channel. Instead of a 12V AC 2A plugpack (ie, 24VA) we are using a 20VA or 30VA 15-0-15 toroidal transformer (T1). Significantly, we have also modified the PCB so that the amplifier sections run from the unregulated ±20V supply rather than the regulated ±12V supply, which was sufficient for driving headphones but a bit limiting for loudspeakers.

Another benefit of using the toroidal transformer is that it has a centre tap which means we can use a bridge rectifier (BR1) to get full-wave rectification, recharging the filter capacitors at 100Hz rather than 50Hz. This reduces supply ripple and thus reduces resicual hum while increasing available power and dynamic headroom.

T1 and BR1 are mounted on a small secondary PCB which forms a self-contained mains power supply. We have done this for a number of reasons; one is that it allows us to build the unit as a double-insulated piece of equipment.

Most commercial devices that constructors are likely to "rat" for their amplifier housing will already be double-insulated (and thus have no earth connection).

We pulled the pin headers off the power supply PCB of the recycled set-top box and re-used these on our board, allowing the pre-existing mains cable and main power switch to simply plug in, as they did before.

While we were at it, we stuck another pair of 4700µF filter capacitors on the power supply board. This improves the power supply filtering and also means that very little 100Hz current passes through the wiring between the two boards, minimising hum coupling into the amplifiers.

Switch-on/off behaviour

You may notice that there is no speaker protector or de-thump circuit. Neither is really necessary in this case. The amplifier's power supply can only deliver about 40W and this is unlikely to do much damage to a speaker in the case of a circuit failure, especially since some of this would be dissipated in the amplifier itself.

As for switch-on and switch-off thumps, the headphone amplifier circuit was already designed to minimise these and since speakers are significantly less sensitive, these should be kept well under control.

This was partly achieved by removing the capacitor which would typically be between Q5's base and the positive rail (as present in the 20W Class-A Amplifier and the Ultra-LD Mk.3). Despite changing the circuit to run from an unregulated supply, virtually no ripple seems to make its way to the amplifier outputs, as demonstrated by the very good signal-to-noise ratio of -120dB (including the preamplifier!).

Diodes D11 & D12 (D13 & D14 in the right channel) are important for proper switch-on behaviour. While the ±12V regulated rails are already protected to prevent the positive rail from going negative and vice versa, the RC filtered supply rails for the early amplifier stages can still suffer from this problem unless extra steps are taken. That's because the filter resistors isolate the capacitors from the clamp diodes D4 & D6.

Without D11 and D12, the positive filtered rail could be briefly pulled negative and this would cause an amplifier output excursion. This could cause unwanted noises in the speakers at start-up.

The different positive and negative rail filter resistors (10Ω and 47Ω respectively) allow the positive rail to come up more quickly which also helps achieve a clean switch-on. Together, these details allow the amplifiers to operate normally just milliseconds after both filter capacitors are partially charged.

Similarly, diodes D9 & D10 clamp the RC-filtered supply for the op amps in the preamplifier. Without these, the op amp input transistors may become briefly reverse-biased at switch on, causing supply current to flow into the AC-coupling capacitors and again causing a thump to be generated.

Finally, the 1k resistor in parallel with D10 discharges the op amp negative supply rail faster than the positive rail when power is removed. The op amps are prone to oscillation when their supply capacitor is mostly discharged and this can cause a "chirp" at switch-off. With the 1kΩ discharge resistor, this chirp is made very short and often eliminated entirely. SC

Next month

In November SILICON CHIP we shall present the construction details and describe the setting-up procedure. That includes details of the new power supply board and mounting both PCBs, plus the small off-the-shelf DAC, inside the case.

RaspberryPi
IN STOCK NOW

Check out our
SUPER SPECIAL
BUNDLE PRICES

For more information & to shop online, visit www.wiltronics.com.au
Ph: (03) 5334 2513 | Email: sales@wiltronics.com.au

WILTRONICS

Raspberry Pi is a trademark of the Raspberry Pi Foundation

CIRCUIT NOTEBOOK

Interesting circuit ideas which we have checked but not built and tested. Contributions will be paid for at standard rates. All submissions should include full name, address & phone number.

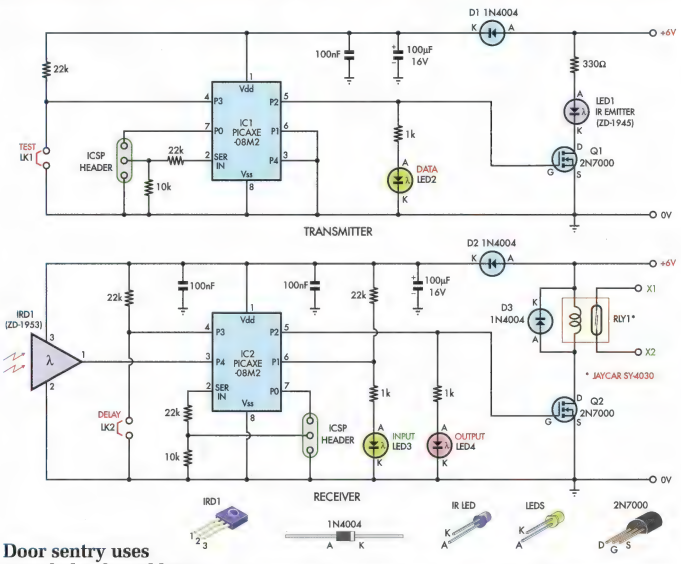

Door sentry uses encoded infrared beam

This Door Sentry has separate transmitter and receiver units based on the PICAXE08M2 microprocessor and produces a 38kHz modulated infrared beam encoded using a Sony remote control code. In this project, the same code number is sent continually, similar to holding your finger on a remote control button. The transmitter and receiver codes must match and you can select your own code number using directions in the program notes.

The transmitter and receiver units are installed either side of a doorway or passageway, making sure the IR beam is aligned. Thus any interruption of the IR beam will trigger the alarm sequence. Like all modern remote control devices, the modulated IR beam works well under a variety of lighting conditions. This is the result of using an infrared detector module (IRD1) and can be further improved by adding a black tube in front of the module.

The PIC transmitter uses the "irout" command and delivers the remote control code pulses from its P2 output (pin 5) to infrared emitter LED1 via FET Q1 and to data indicator LED2. LED2 flashes to indicate that the remote control codes are being transmitted. The IR LED current is set by the 330Ω resistor and covers doorways up to 4m wide. Using lower resistor values will give a greater distance but will reduce battery life. Placing a test jumper on LK1 at input P3 (pin 4) of IC1 will transmit an alternative code number to the receiver and this will sound the alarm as the transmit and receive codes will be different.

The PIC receiver uses the "irin" command to monitor the Sony remote control codes from the infrared

Energy Measurement Using The USB Power Monitor

A reader suggested that we add a watt hour read-out to the USB Power Monitor (December 2012), to measure the total energy consumed by the connected device. We thought this was a good idea and so have produced an updated version of the firmware that adds this feature.

The original USB Power Monitor software has three display modes which you can cycle through with the onboard pushbutton: load current, bus voltage and power. An energy display has been added as the fourth mode.

When showing energy usage, the display initially reads "F" followed by the reading in milliwatt hours. This starts out at zero on the application of power and climbs once power is drawn from the output. The initial reading resolution is one microwatt hour. For readings of 100 milliwatt hours and above, the first letter changes to "E" (for energy) and the read-out is in watt hours.

The maximum reading is 99.9 watt hours; once it reaches 100, the display rolls back over to zero. This should be adequate for most purposes but if you need to measure more than 100 watt hours it's simply a matter of keeping track of the number of times the display rolls over and adding that number, multiplied by 100Wh, to the final reading.

The accuracy of this reading should be reasonably good. The power measurement accuracy was stated in the original article as ±5%, ±0.1mW. Given that the energy measurement is essentially this reading integrated over time, we expect its accuracy to be similar although there is the additional error in time measurement due to variations in the micro's internal oscillator frequency.

The oscillator has the following specifications: ±2% at 25°C and 3-5.5V; ±5% at -45 to +85°C; and ±10% at -45 to +125°C. Since the unit will generally be operated at ambient temperatures close to 25°C and with a relatively small range of supply voltage (ie, close to 5V) we expect the oscillator to be within 2% of the specified frequency (ie, 16MHz) most of the time.

There is also a rounding error associated with the precision in which the energy reading is accumulated (in units of 1/40th of a microwatt) but in most cases this will be minor. We can therefore expect the accuracy of the energy measurement to be around ±7% although in most cases you can expect better than this.

To program the micro with this new firmware, if you have already built the unit you will need to cut a rectangular hole in the protective heatshrink tubing sleeve to allow access to the five-pin reprogramming header pads on the PCB. This can be done carefully with a sharp hobby knife – don't press so hard that it makes contact with the board or any of the components.

You can then plug a standard 5-pin header into the PCB and it should stay in place although note that it won't go in all the way as the pins will hit the LCD on the other side of the board (so don't press it down too hard). A PICkit3 can then be connected to this header and the new hex file, 0410912B.hex (available on the Silicon Chip website) can then be loaded into the chip using Microchip MPLab or other similar software.

It will be necessary to re-calibrate the unit as this blanks the calibration values stored in the micro's EEPROM. Remember to do this with nothing plugged into the USB device port. See the instructions in the original article.

Note that if you want a reading in joules, it's simply a matter of multiplying the watt hours reading by 3600 (ie, the number of seconds in an hour). Similarly, for kilojoules, multiply by 3.6.

While we were adding this new feature, we also fixed a discrepancy between the published article and the way the firmware operates. We originally said that the unit will read "x.xxA" for currents of 1A and above but it was actually programmed to read "A.xxx". The intention was to give an extra digit of resolution but at this sort of current level, that is hardly necessary. So we changed the updated software to give a read-out consistent with the article text.

Nicholas Vinen,
Silicon Chip.

detector module, IRD1. Detecting the correct code will turn on output P1 and light input indicator LED3. Interrupting the IR beam or detecting the wrong code will pulse output P2 on for 1s to turn on FET Q2, reed relay RLY1 and output indicator LED4. Placing a jumper on LK2 at input P3 adds a 10s delay before the next alarm can occur. This prevents multiple alarms should a hand be waved through the IR beam.

The transmitter and receiver require 6V DC power supplies. The prototype used battery packs containing four AA alkaline cells. Note that each circuit includes a series diode (D1 or D2) to reduce the microprocessor voltage to 5.4V, the maximum specified operating voltage. The LED indicators are water-clear 3mm LEDs suitable for low current use.

Both the transmit and receive software programs have been combined into a single master program called *doorsentry_08m2.bas* and this must be loaded into both microprocessors (IC1 & IC2) via the 3-pin ICSP header pins and a PICAXE special serial or USB download cable. Each power-up a routine checks the logic level present on P1 (IC1 & IC2) and will run the transmit program if the logic level is low or run the receive program the logic level is high.

The software can be downloaded from www.siliconchip.com.au

Ian Robertson,
Engadine, NSW. ($60)

Issues Getting Dog-Eared?
Keep your copies safe with our handy binders
Order online from www.siliconchip.com.au or fill in and mail the handy order form in this issue or ring (02) 9939 3295 and quote your credit card number.

PIC-based noisemaker circuit for electric wheelchairs & electric scooters

The quietness of electric cars and hybrids can be a problem. Our long association with internal combustion engines has accustomed us to noisy vehicles so that electric ones can come upon us unexpectedly. As a result, car makers and legislators around the world are working on artificial noises for these vehicles.

This is also a problem for electric wheelchairs and scooters, particularly when they mix with pedestrians in shopping centres. Progress through crowds can be difficult.

A horn is not a solution because it is aggressive and irritates people. This design automatically responds to forward or reverse motion by making suitable vehicle sounds. It simply announces the presence of a vehicle rather than demanding passage. Extensive testing amongst randomly ambling bipeds has proved its effectiveness.

The circuit (see facing page) is based on a PIC16F1827 microcontroller. Forward and reverse motor voltages are filtered to an average value by the resistor capacitor networks and clamped by 5.1V zener diodes ZD2 & ZD3 to protect the PIC.

For vehicles with multiple motors, the connections can be to any one motor. The PIC measures motor forward voltage with an ADC channel and if it exceeds the reference set by trimpot VR1, generates audio from its PWM output. A sound file in memory is played, initially repeating every half a second. As the vehicle speed increases, the average motor voltage increases and the software raises the tempo of the sound.

Similarly, if the reverse voltage exceeds the reference set by trimpot VR2, we hear the familiar beeping sound of a truck reversing. This sound does not vary in tempo, so the PIC does not need to measure the reverse voltage. It simply compares it to the reference with one of its comparators.

The 1.2kΩ resistors and 10nF capacitors filter PWM audio from pin 6 of the PIC. Trimpot VR3 sets the maximum volume. On the go, two pushbuttons can vary the volume through five steps as indicated by the LEDs.

The audio amplifier is unconventional. It was designed for minimum current and sound quality was not a consideration. Distortion may even be an advantage in this application.

The output transistors operate in class B, with zero quiescent current. There is AC negative feedback from the output to the base of the BC547 driver transistor but no DC feedback. Instead, 5V from pin 7 of the PIC biases the driver on, setting the operating point and enabling it to be turned off.

The 10kΩ resistors and the 22µF capacitor slow the rise and fall of this voltage to eliminate loud pops from the speaker. The MJE3055 and MJE2955 transistors should be mounted on a heatsink (eg, Jaycar H0668).

Peter Reed is this month's winner of a $150 gift voucher from Hare & Forbes

The vehicle battery, usually 24V, powers the circuit. Because some vehicles have quite low battery capacity, the hardware and software minimise standby current. An MC1702-5 low-quiescent current regulator supplies 5V for the PIC. The BS170 Mosfet and associated parts limit the input to the MC1702-5 to well below its maximum voltage but add only a few microamps to the current drain.

When the vehicle has been stationary for a minute, the PIC goes into low-power sleep mode and it also shuts down the audio amplifier, the forward and reverse references and the LEDs. Periodically, it wakes briefly to check for forward or reverse motor voltages. This results in an average current drain of about 0.5mA.

The PIC wakes from this state on movement of the vehicle or presses of the volume pushbuttons. When switched off, the PIC shuts down everything it can and the current drain is only a few tens of microamps.

A 2A fuse protects the wiring to the battery. For the same reason, 4.7kΩ resistors are included in series with the connections to the motor wiring.

If you have the space, a computer woofer makes a good sound source. You need to disconnect the internal amplifier and connect the woofer directly to the speaker terminals of the noisemaker circuit. Otherwise, horns and communication speakers such as the Jaycar AS-3180 and AS-3182 are less impressive but easier to mount.

Setting up involves adjusting the three trimpots. As stated, VR3 sets the maximum volume, while VR1 (the forward reference) and VR2 (the reverse reference) set the thresholds at which the circuit activates. Set them high enough to reject spurious glitches but low enough to respond to low-speed motion.

Peter Reed,
Fullarton, SA.

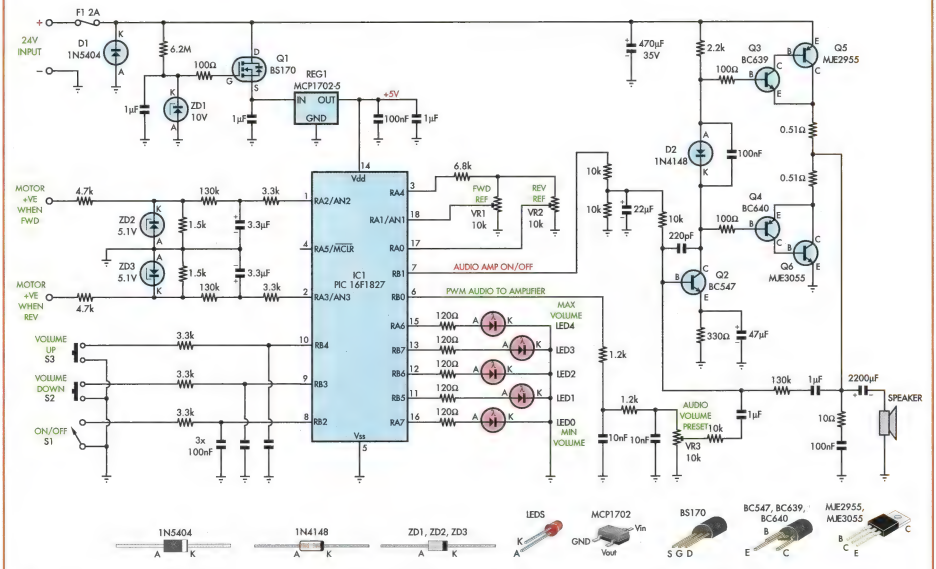

The circuit is based on a PIC16F1827 microcontroller. It monitors the forward and reverse motor voltages, generates the required audio and drives an audio amplifier based on transistors Q2-Q6. Pushbutton switches S2 & S3 vary the volume, LEDs0-4 indicate the volume setting and trimpot VR3 sets the maximum volume. Power comes from the vehicle's 24V battery.

Automatic Car Headlight Controller

Many modern cars have automatic headlights and daytime running lights for great vehicle visibility. Now you can have the same feature on your car and it is a straightforward installation. You will never have to worry about accidentally driving at night with your headlights off and they will turn off automatically after you switch off the engine.

By NICHOLAS VINEN & JOHN CLARKE

HAVING THE headlights automatically come on at night is good but it also works as you drive through tunnels or if the ambient light drops below a certain level, as it can in late afternoon or during heavy rain. And if that doesn't convince you of the worth of automatic headlight switching, consider that driving without lights on at night can bring a heavy fine and loss of points from your licence.

In essence, this Automatic Headlight Controller monitors the ambient light using an LDR (light-dependent resistor). Once the light drops below a preset level, the low-beam headlights come on. The unit can also provide operation of the headlights during the day (daytime running) to make your vehicle more visible to others without producing excessive glare. The lights are run with reduced brightness which also lessens the load on the alternator.

While the unit will take care of headlight switching most of the time, you can still override it, should you want to. This means that you can turn the lights on at any time but if they are already switched on by the controller, you cannot switch them off manually.

Many late-model vehicles with automatic headlights also generally turn the lights on when you unlock the doors (so you can see your way to the car) and leave them on for a short while after turning the ignition off (so you don't trip over something in the dark) and this unit can do that too.

We've already mentioned that the Automatic Headlight Controller operates the low-beam headlights and it is effectively connected in parallel with the existing relay or switching for low-beam operation. If you have an older car with dual-filament headlamps (ie, high-beam/low-beam filaments) the circuit is arranged so that when you flash the headlights or

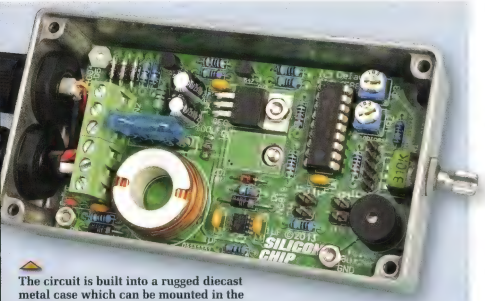

The circuit is built into a rugged diecast metal case which can be mounted in the engine compartment (prototype shown).

switch to high beam, the Automatic Headlight Controller is switched off. This effectively duplicates the existing headlight switching, to switch off the low beam. If you have a car with dual headlamp bulbs, switching to high-beam operation normally leaves the low beams on as well and the Automatic Headlight Controller can have that arrangement too.

The unit is based on a Mosfet driven by a microcontroller. This can switch the low-beam lamps on and off or drive them at reduced power with pulse width modulation for daytime running.

Note that we do not recommend the Automatic Headlight Controller for use with cars that have HID (high intensity Xenon discharge) lamps. If you have a late-model car with HID lamps, it probably already has full automatic headlight operation in any case, so this project would be superfluous. However, if you have retrofitted HID lamps to your car, they will not be compatible as the PWM operation of the headlight controller will not function correctly when feeding the high-voltage drivers for the HID lamps.

If your car has LED headlights, again it probably already has automatic headlight operation. But if you have managed to do a LED retrofit, it will not work correctly with the Automatic Headlight Controller.

Circuit description

The full circuit is shown in Fig.1. It uses an IRF1405 N-channel Mosfet (Q1), an IRS21850S high-side Mosfet driver (IC2) and a PIC16F88 microcontroller (IC1).

Let's start by looking at the function which varies the brightness of the low beam lamps from off to full. IC1 provides a PWM (pulse width modulation) signal from its pin 6 and this is fed to pin 2 of IC2. When pin 2 of IC2 is low, pin 7 pulls the gate of Mosfet Q1 low and the low beam lamps are off (unless, off course, they have been switched on separately via the car's headlight switching).

For daytime running mode, IC1 supplies a PWM signal at 25kHz with a typical duty cycle of 75-80% and IC2 feeds this gate signal through to Q1 to turn it on, each time pin 2 of IC2 goes high. However, IC2 is not simply a pass-through switch; it is a high-side Mosfet driver. It's needed because Mosfet Q1 is used in "high side" switching. Let's see what this means.

High side switching.

Simply put, Mosfet Q1 is in series with the +12V line from the car's battery to the headlights. When Q1 is switched on, its source must go to +12V (or very close to it), in order to feed +12V to the low-beam lamps. However, to turn on fully, the Mosfet needs a gate signal of about 10V. This means that when Q1 is feeding +12V to the lamps, its gate voltage needs to be about +22V.

So how do we get a 22V gate signal when the main supply voltage is only 12V? That is the function of IC2.

When IC1 feeds a 5V signal to pin 2 of IC2, the high-side driver charges the gate of Mosfet Q1 to about +11.7V, via output pin 7 and the 2.2Ω resistor. This 11.7V comes from its pin 8, which is labelled "V_B" (voltage boost). It's less than the nominal 12V supply because of the voltage drop across Schottky diode D1 which supplies this pin.

As soon as Q1 starts to switch on, it allows current to flow through inductor L2 and the car's headlights and this causes its source voltage to rise. This reduces Q1's effective gate-source voltage so IC2 must therefore raise the gate voltage further to keep Q1 in a conducting state, up to a maximum of about 22V with the source at 12V as stated above.

This is well above IC2's 12V supply so it must generate a higher voltage rail and it does this using the 1μF boost capacitor, connected between the Mosfet's source pin and the aforementioned V_B supply pin (pin 8). This capacitor starts off charged to +11.7V and as the Mosfet source voltage increases, this is coupled to V_B via the capacitor, increasing the boost voltage which ultimately reaches about 23.5V. This drops slightly due to the current which goes into charging the Mosfet's gate capacitance of about 5.5nF.

This boost capacitor recharges the next time Q1 switches off, as the source voltage drops to around 0V, pulled down by the load, ie, the headlights via L2. Note that this means that Q1 can not be driven with a 100% duty cycle as the boost capacitor would have no opportunity to recharge and would eventually discharge, causing Q1 to switch off.

Also, we rely on the load being low impedance so that the Mosfet's source is pulled to 0V fairly rapidly once it switches off. For full brightness, we use a duty cycle of 99.5%, leaving only a small period (<1μs) for the boost capacitor to recharge. In practice, any incandescent or halogen globe has a

Specifications

Operating voltage: 11.5-15V DC
Operating current: approximately 25mA
Quiescent current: typically <1μA
Total light power: 1-12A, 12-150W nominal (up to 175W @ 14.4V)
Voltage drop: typically <0.25V
Dissipation: typically <3W
Under-voltage lockout: ~10.5V

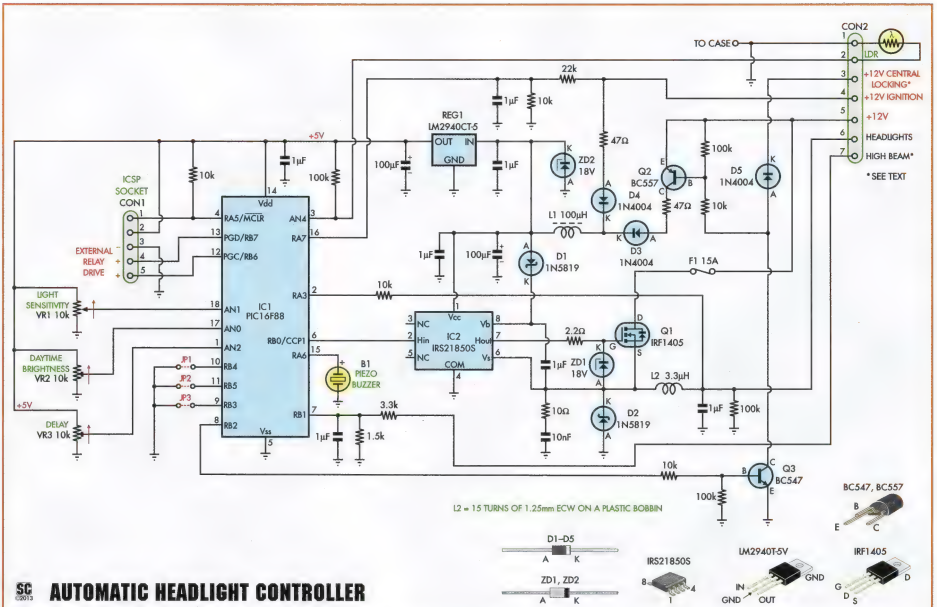

AUTOMATIC HEADLIGHT CONTROLLER

Fig.1: the Automatic Headlights Controller circuit. Microcontroller IC1 monitors the LDR and pot/jumper settings while IC2 drives Mosfet Q1 which acts as a high-side switch, controlling power to the headlights. IC2 & Q1 are driven using PWM with a duty cycle ranging from 0% up to 99.5%. Inductor L2 acts as an EMI filter while L1 filters the power supply for the unit itself.

low enough filament resistance to do the job.

ZD1 protects Q1's gate from voltage spikes which may exceed its 20V gate-source rating, while the 2.2Ω resistor also helps by forming an RC low-pass filter with Q1's gate capacitance. A snubber network (10Ω/10nF) limits the slew rate of the voltage at Q1's source to reduce generated electromagnetic interference (EMI).

The low-pass filter formed by inductor L2 and the 1µF capacitor eliminates most of the harmonics of the 25kHz square-wave drive, smoothing out the PWM square-wave into a more sinusoidal/triangular waveform. This is virtually identical in configuration to a DC/DC step-down (buck) converter.

We aren't trying to get a completely smooth DC output in this case, hence the relatively low filter component values. Schottky diode (D2) has a similar role to the diode in a buck converter, so that when Q1 switches off, there is a path for current to continue to flow in coil L2 while its magnetic field collapses.

Auto Headlight Controller: Main Features

- Works with incandescent or halogen lights
- Suits majority of vehicles made in the last 25 years without automatic lights (lights switched on high side)
- Optional daytime running lights
- Adjustable light sensitivity
- Adjustable switch-off delay
- Adjustable daytime running brightness from zero up to nearly full brightness
- Under-voltage cut-out, to prevent battery over-discharge and to allow engine starting in cold weather/with a weak battery
- 25kHz PWM drive with EMI filtering to minimal radio interference
- Optional 'leaving home' feature turns lights on for 30 seconds (adjustable) after doors unlocked (requires central locking)
- Optional 'coming home' feature leaves lights on for 30 seconds (adjustable) after ignition is switched off
- Warning buzzer to indicate if lights have been left on (optional)
- Virtually no battery drain with lights and ignition off
- Protected against load dumps and other voltage spikes
- Can drive external relay for separately wired tail or instrument lamps
- Fits in a compact metal box, 111 x 60 x 30mm

Ambient light sensing

Light level monitoring is done using an externally mounted light-dependent resistor (LDR) connected between pins 1 & 2 of CON2. This forms a voltage divider in combination with a 100kΩ resistor from the 5V rail. The voltage at pin 3 of IC1 (analog input AN4) varies between a high level of about 4.6V when the LDR is in the dark (high resistance) and a low level of about 0.2V when the LDR is in direct sunlight (low resistance).

This voltage is digitally filtered by IC1 and then compared to a voltage threshold set using potentiometer VR1. Some hysteresis is added to this calculation in order to prevent the lights from continually switching on and off at dawn or dusk when the general light level is near the threshold. It also prevents the headlights from switching on and off rapidly as you drive past very bright street lamps.

When the result of this comparison changes, after a delay, we change the light brightness by controlling the PWM drive to IC2. The delay in going from daytime running to full brightness is more or less fixed (and short) while the delay in switching back to the daytime running is controlled by trimpot VR3, which varies the voltage fed to the AN2 analog input of IC1.

Trimpot VR2 varies the voltage at analog input AN0 of IC1 and this simply determines the duty cycle at which Q1 is driven for daytime running. This can be set all the way from zero (off) up to maximum brightness. A typical setting is about 75-80% but VR2 is provided for fine-tuning.

Power supply

The car's switched +12V ignition line is wired to pin 4 of CON2 so that the unit is switched on with the vehicle. Current flows via a 47Ω resistor and diode D4. This resistor and the following 100µH axial inductor L1 and a 100µF electrolytic capacitor smooths out voltage spikes from the vehicle's power system (eg, caused by the windscreen wiper motors). Larger spikes are clamped by 18V zener diode ZD2.

IC2 runs from this nominal 12V filtered rail while the rest of the circuitry operates from 5V, derived using automotive low-dropout (LDO) regulator REG1.

Now if you are trying to start a car with a weak battery (old and/or low ambient temperature), the battery voltage can drop significantly and having the headlights on only makes this worse. IC2 has an internal under-voltage lockout circuit which causes its output to switch off when the supply drops below 8-9V. Taking into account voltage drops in its power supply, this kicks in once the battery voltage drops below about 10.5V.

So that the lights can remain on for a time after the ignition is switched off, IC1 can be powered from a permanent 12V rail via PNP transistor Q2. This is switched on by NPN transistor Q3 which is in turn controlled by IC1's RB2 output (active-high).

Extra features

IC1 monitors the ignition state via input RA7 and a voltage divider/filter and after the ignition has been off for a certain time period, brings output RB2 low to power itself down completely. In this powered-down state, it consumes virtually no current – just the leakage currents through Mosfet Q1 and transistor Q2, both of which are negligible (typically <1µA).

If the car has central locking and the door unlock solenoid is wired to pin 3 of CON2, then when the doors are unlocked, diode D5 becomes forward biased and thus transistor Q2 is switched on, powering up the circuit. IC1 can then check the state of the ignition via input RA7 and, finding it off, will know that it was triggered by the central locking and act accordingly; it normally turns the headlights on for 30

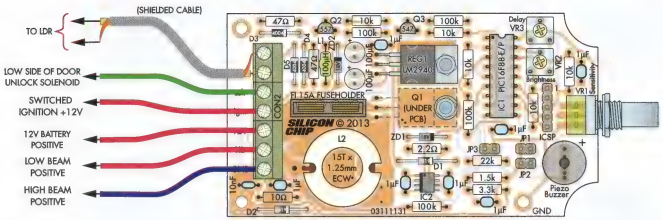

Fig.2: all parts except for the LDR mount on this PCB which fits into a compact diecast case. Q1 is mounted on the case for heatsinking with its leads poking up the through the board. An on-board 15A blade fuse provides fault protection while externally accessible potentiometer VR1 allows the light sensitivity of the unit to be adjusted.

seconds after the doors are unlocked.

IC1 can also check whether the headlights have been left on when the ignition is switched off. It does this by briefly turning off drive to Q1 when the ignition is switched off and monitoring the lamp drive voltage using input RA3 (pin 2). If this does not drop to 0V fairly quickly, that means the lights have been turned on manually and left on so it sounds piezo buzzer PB1 by switching its RA6 output on and off to form a series of beeps (250ms on, 250ms off for 10s).

CON2's pin 7 connects to the switched +12V line from the high-beam circuit of the car. This is monitored by pin 7 of microcontroller IC1 via a resistive voltage divider comprising 3.3kΩ and 1.5kΩ resistors. When pin 7 is pulled high by the high-beam circuit, IC1 kills the PWM drive from its pin 6 and therefore switches off the low-beam supply to the headlights. **This option only needs to be connected if the car's headlights have dual-filament lamps.**

This is an important safety feature because we don't want both filaments in the headlights turned on at the same time. If they were, the bulb would rapidly fail and you could be left with no headlights at all!

Finally, three of IC1's input pins (RB3, RB4 & RB5) are connected to headers which set various linking options (explained below). IC1 has internal pull-ups on all of its port B inputs and if any of these jumpers are fitted, they pull the connected input low.

Construction

Most parts mount on a single PCB coded 03111131 and measuring 98 x 53mm. Fig.2 shows the PCB layout.

Before starting assembly, place the board in the bottom of the diecast box with its righthand side (ie, with the cut-outs) hard against the end and mark the positions for the three mounting holes on the base of the box. You should also mark the centre of the tab hole for Mosfet Q1. Don't drill the holes yet though – that step comes later.

That done, you can start fitting the parts on the PCB. IC2 is an SMD and it's easiest to fit this first. Put a small amount of solder on one pad (say, pin 8 at upper-right) and while heating this solder, slide the IC into place, ensuring that pin 1 (indicated by dot, divot or bevelled edge) is at upper-left. Check its alignment and if the pins are not properly centred on the pads, re-melt the solder and nudge it into place.

Once the alignment is correct, solder the rest of the pins, then add a little extra solder to that first pin, to refresh the joint. If any pins are bridged, clean up the excess solder using solder wick.

Proceed by installing all the resistors in the usual manner, checking each value with a DMM. Follow with the diodes; these are all orientated with their cathode stripes either towards the right or top edge of the PCB. Note that there are three different types which must not be mixed up.

Capacitor Codes

Value	µF Value	IEC Code	EIA Code
1µF	1µF	1u0	105
10nF	0.01µF	10n	103

Table 1: Resistor Colour Codes

❑	No.	Value	4-Band Code (1%)	5-Band Code (1%)
❑	4	100kΩ	brown black yellow brown	brown black black orange brown
❑	1	22kΩ	red red orange brown	red red black red brown
❑	5	10kΩ	brown black orange brown	brown black black red brown
❑	1	3.3kΩ	orange orange red brown	orange orange black brown brown
❑	1	1.5kΩ	brown green red brown	brown green black brown brown
❑	2	47Ω	yellow violet black brown	yellow violet black gold brown
❑	1	10Ω	brown black black brown	brown black black gold brown
❑	1	2.2Ω	red red gold brown	red red black silver brown

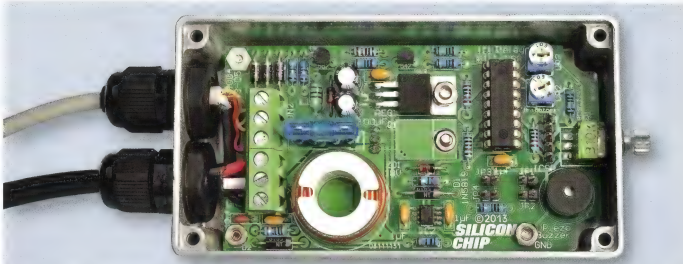

The external leads are fed through cable glands at one end of the case. Note that this photo shows a prototype unit, with several changes later made to the PCB to obtain the final version shown in Fig.2

Follow with axial RF inductor L1, then mount an 18-pin DIL socket for IC1 with the notch at the top. REG1 can then go in – its leads must be bent down about 6mm from its metal tab so that they fit through the pads while the tab mounting hole lines up with that on the PCB. Use an M3 x 10mm machine screw, nut and shakeproof washer to attach it firmly to the PCB (screw head on the underside) and then solder and trim its leads.

Next, install the ceramic capacitors, then fit the small-signal transistors. You may need to bend the latter's leads to fit the triangular pad pattern on the PCB; don't get the two different types mixed up. Trimpots VR2 & VR3 can be soldered next, followed by the pin headers.

Follow with the electrolytic capacitors, making sure that the longer (+) leads go towards the top of the board. That done, dovetail the three terminal blocks (two 2-way & one 3-way) together to form a 7-way block and fit this with the wire entry holes towards the lefthand edge of the PCB.

If fitting the optional warning piezo buzzer, do it now but note that this only makes sense if the unit is to be installed in the vehicle's cabin area. **If it's going in the engine bay, you can fit a pin header here instead and run leads back into the cabin so the buzzer can be heard.**

Fuseholder

We're using a PCB-mount blade fuseholder as these are designed for automotive use. Fit this now by pushing it all the way down through the mounting holes (it may be a tight fit) and then soldering the four pins.

This soldering is a bit tricky, partly because you need a very hot iron but also because you have to be careful not to let any solder flow down through the hole in the middle of each pin, as this could prevent the fuse from being inserted. Do not solder the holder with a fuse in place!

The best technique is to add a little solder to wet the iron (turn up the temperature if you can), hold it at the junction of the fuseholder pin and PCB pad for a few seconds to heat up the metal, then add solder while moving the iron around the outside the pin. Remove the iron as soon as a good fillet has formed to reduce the chance of the solder flowing through the hole.

Winding inductor L2

An air-cored inductor is used for the filter since these do not saturate and thus can handle the high current. To wind it, first scrape about 10mm of insulation off one end of a 1m length of 1.25mm diameter enamelled copper wire using a hobby knife or fine emery paper. That done, use pliers to bend this end at right angles just beyond where the bare copper starts and slide it into one of the slots on the bobbin.

Wind on 15.5 turns, then bend the wire to pass through the opposite slot. This is much easier to do if you make a

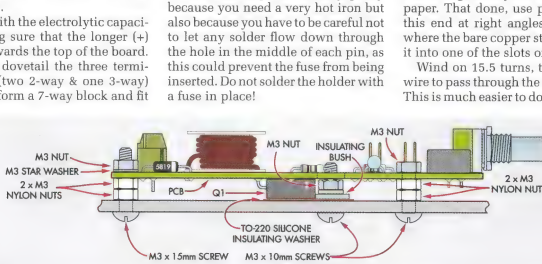

Fig.3: this cross-section diagram shows how Mosfet Q1 and the PCB are mounted in the case. Pairs of Nylon M3 nuts are used as spacers, so that the PCB is at the right height for Q1 to fit underneath and so that fuse F1 clears the lid of the case. Note that the mounting screw at lower-left is longer, to allow a star washer to be fitted for good earthing contact.

Parts List

1 double-sided PCB, code 03111131, 98 x 53mm
1 diecast aluminium box, 111 x 60 x 30mm (Jaycar HB5062)
2 small cable glands (to suit 3-6.5mm diameter cable, eg, Jaycar HP0720, Altronics H4304)
1 PCB-mount blade fuse holder (Altronics S6040) (F1)
1 15A blade fuse (F1)
1 10kΩ linear 9mm PCB-mount horizontal potentiometer (VR1)
2 10kΩ mini horizontal trimpots (VR2,VR3)
1 18-pin DIL socket
1 100μH axial RF inductor (L1)
1 pot core bobbin (Jaycar LF1062, Altronics L5305)
2 2-way terminal blocks and 1 3-way terminal block (CON2)
1 5-pin header (CON1)
3 2-pin headers with jumper shunts (JP1-JP4)
1 100kΩ LDR (LDR1) (Jaycar RD3480, Altronics Z1619)
1 TO-220 insulating washer and plastic mounting bush
1 1m length 1.25mm-diameter enamelled copper wire
1 25mm length 25mm diameter heatshrink tubing
1 short length 5mm diameter heatshrink tubing
1 length 15A twin-core automotive cable
1 length single-core shielded cable
2 lengths 7.5A automotive wire, green (ground) & red (ignition power)
1 length 7.5A automotive wire, blue (central locking; optional)
1 M3 x 15mm machine screw
5 M3 x 10mm machine screws
5 M3 nuts
5 M3 shakeproof washers
7 M3 Nylon nuts
1 crimp eyelet connector
1 small PCB-mount 5V piezo buzzer (optional) (Altronics S6104 or S6105)

Miscellaneous

Automotive connectors, heatshrink tubing, etc
(Note: extra parts may be required to mount box, LDR, etc)

Semiconductors

1 PIC16F88-E/P microcontroller programmed with 0311113A.HEX (IC1)
1 IRS21850S high-side Mosfet driver (element14 1925162) (IC2)
1 LM2940CT-5 5V LDO automotive regulator (REG1)
1 IRF1405 automotive N-channel Mosfet (Q1)
1 BC557 PNP transistor (Q2)
1 BC547 NPN transistor (Q3)
2 1N5819 1A Schottky diodes (D1,D2)
3 1N4004 1A diodes (D3-D5)
2 1N5404 3A diodes (for tail light & instrument light wiring; see text)
2 18V 1W Zener diodes (ZD1,ZD2)

Capacitors

2 100μF 25V electrolytic
6 1μF MMC
1 10nF MMC or ceramic disc

Resistors (0.25W, 1%)

4 100kΩ	1 1.5kΩ
1 22kΩ	2 47Ω
5 10kΩ	1 10Ω
1 3.3kΩ	1 2.2Ω (5%)

winding jig using an M5 x 70mm bolt and various scrap pieces of PCB material and timber – see page 67, SILICON CHIP, August 2011. If you don't want to do that, wind some electrical tape around a solid rod to make it a snug fit through the middle of the former, otherwise the bobbin's thin plastic is likely to crack during winding.

Once finished, slip a short length of 20-25mm-diameter heatshrink tubing over the bobbin and shrink it down. Once that's in place, trim off the excess wire and strip the insulation from the other end. The inductor can then be mounted on the board.

Be sure to solder its leads on both the top and bottom of the PCB, as this makes a measurable difference to the output voltage and thus may have an impact on headlight brightness.

Completing the assembly

Now for the final parts. Fit VR1 in place, making sure it sits flush against the PCB surface before soldering its pins, then plug IC1 into its socket (with pin 1 at upper-left). Note that IC1 will be pre-programmed if you purchase it as part of a kit or directly from SILICON CHIP. If not, you will have to program it yourself and you should that now via the ICSP port using 5V power from a PICkit programmer or similar.

Now fit fuse F1 and the board is complete except for Q1 which is the next step. **First, drill the four 3mm holes in the bottom of the diecast box but about 0.5-1mm closer to the righthand end of the box than where you marked them**. That's necessary because the sides of the box taper outwards towards the top.

You will also need to drill holes for VR1 and the two cable glands. The hole for VR1 is centred on the right-hand end of the box and placed 13mm up from the base. Enlarge it to 7mm diameter. Note that it must be placed fairly accurately as the box is only just tall enough to fit the blade fuse.

The holes for the two cable glands go in the other end of the box, 14mm from the bottom and 20mm apart, equidistant from the centre line. These holes must also be positioned accurately as the internal nuts will only just fit side-by-side in the case. You can check their position by temporarily placing these nuts on the inside face. Drill the holes using a pilot drill to begin with, then enlarge them to 12mm using a tapered reamer until everything fits.

De-burr these holes and clean off the swarf, then bend Q1's leads up about 6mm from the tab, so that when fed through the PCB pads from the bottom, the tab mounting hole is centred on the PCB access hole – see Fig.3. Feed an M3 x 10mm machine screw into its mounting hole from the underside, then slip an insulating washer over this, followed by Q1 (tab-side down) then an insulating bush and M3 nut.

Tighten the nut while making sure that the washer and Q1 both face to the left and do not rotate. **That done, check that the tab is properly isolated from the case using a DMM set to measure resistance – the reading should be very high (many megohms).**

Now feed three M3 machine screws up from the underside of the case for mounting the PCB. Two are 10mm-long screws while the third, at lower-left, is 15mm long. Fit two Nylon M3 nuts to each of these screws and do

them up all the way; these form the spacers for the PCB.

Next, remove VR1's nut and feed the pot shaft through its hole in the case, then lower the board down onto the three mounting posts. Use a shake-proof washer and nut for the lower-left mounting hole with the longer screw, as this earths the unit. Attach nuts to the other two mounting screws. Note that while you can use regular M3 nuts for both, we decided to use a Nylon nut for the upper-left hole as it's quite close to D3's anode lead.

Once the PCB is secured in place, attach VR1's nut and fit the two cable glands to the case. Do their mounting nuts up firmly so that they are properly secured.

Setting the options

Jumpers JP1-JP3 set various options, depending on whether a shunt is present or not. These are:

- **JP1 – 'coming home' lights:** if fitted and the LDR is in darkness, runs the lights at 75% duty cycle for 30 seconds after the ignition is switched off. This illuminates the area around the vehicle as you move away from it and is a standard feature of most vehicles with automatic headlights. The delay can be adjusted, although the default should suit most users (see below).
- **JP2 – 'leaving home' lights:** if fitted and the LDR is in darkness, runs the lights at 75% duty cycle for 30 seconds after the doors are unlocked (this also requires connection to the central locking system). This illuminates the area around the vehicle as you get into it and may also help you locate the vehicle in a dark parking lot.

This 30s delay period can also be adjusted – see below.

- **JP3 – timing periods:** allows the 'coming home', 'leaving home' and warning beeper durations to be set. Each can be from 1-63s. To do this, set pots VR1-VR3 fully anti-clockwise for 1s and fully clockwise for 63s. VR1 sets the 'coming home' time, VR2 'leaving home' and VR3 the warning beeper time-out. When set, insert JP3, power up the unit via the ignition switch for a few seconds, power it down and remove JP3, then reset VR1-VR3 to their normal positions.

External wiring

It's easiest to wire up the heavy-duty leads for the lights first. Begin by stripping 20mm of the outer insulation from the twin 15A cable and then 5mm of the inner insulation. Lightly twist the copper strands together and then insert the cable through the lower gland.

Next, guide the two cable wires into their respective terminal block holes, with red for the incoming 12V supply and white for the low-beam lights (LB) output. Tighten the terminal screws firmly and check that there are no stray copper strands poking out, then tighten the gland clamp.

The other connections go via the second gland. Note that while we have shown a single 4-core cable in our photos, in practice we found it easier to use separate 7.5A automotive wires for the switched ignition line and central locking (optional), plus a single-core shielded cable for the LDR. We connected ground via the unit's metal case.

Feed these wires in and screw them into the terminal block – you may find it helpful to use tweezers or small pliers to guide them and hold them in while doing so. You may need to double over the internal conductor of the shielded cable to make it thick

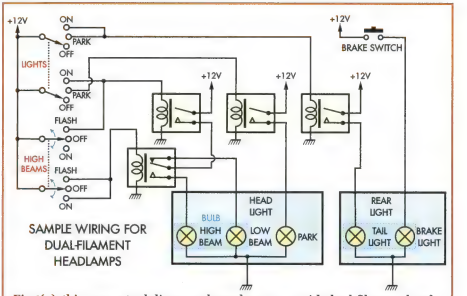

Fig.4(a): this conceptual diagram shows how a car with dual-filament headlight bulbs might be wired, so that only one of the two filaments (low or high beams) is powered at any given time.

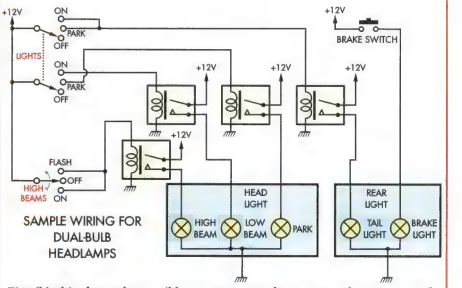

Fig.4(b): this shows the possible arrangement when separate lamps are used. In this case, the low-beams and high-beams can be powered simultaneously but only if both the light switch and high-beam switch are on.

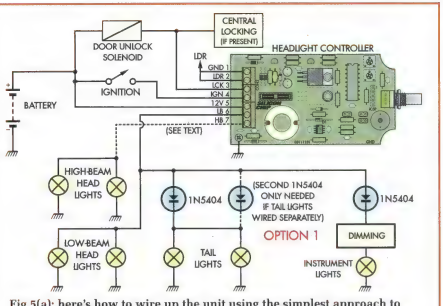

Fig.5(a): here's how to wire up the unit using the simplest approach to powering the tail and instrument lights (number plate lights not shown). When the low beam output is driven high, the added diodes are forward biased so that all the lights are powered. The diodes can be connected in-line with the wiring (see text).

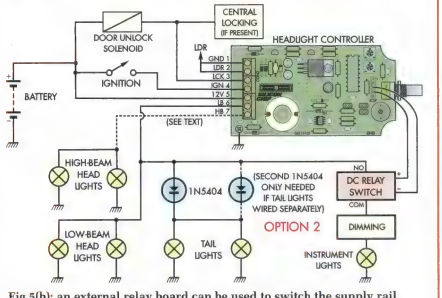

Fig.5(b): an external relay board can be used to switch the supply rail to the instrument lights to prevent them from also coming on when the daytime running lights are powered. The drive for this relay comes from CON1 on the PCB. The rest of the wiring remains the same.

enough to be properly held by the terminal.

Depending on your car's high beam switching arrangement, you may also have to run a wire from pin 7 of CON2 to the switched +12V side of one of the high-beam filaments. This is necessary for vehicles where the low beam filaments are switched off when the high beams are on, eg, when dual-filament headlamp bulbs are used but not in the case of individual bulbs.

The easiest way to check is to turn on the low-beam lights, note which filaments are powered, then switch on the high beams and check to see whether the low-beam filaments have gone off. If so, you will need that extra wire so that the unit can sense when the high beams are activated.

With those wires in place, do up the second cable gland wire clamp. Note that while we are using cable glands, the box is not fully watertight. This should not be an issue as long as the unit is mounted either inside the vehicle cabin or under the bonnet in a location where it is protected from large volume or high-pressure water ingress.

If unsure, you can apply neutral-cure silicone sealant around the inside of VR1's mounting hole and run a bead around the top of the box before screwing the lid in place. However, make sure everything is working to your satisfaction before 'gluing' the lid in place in this manner.

Vehicle connections

The first thing you need to do before fitting the unit to a vehicle is figure out what wiring is required. While many cars will have a relay to switch the headlights, some older models may switch them directly. In these latter vehicles, it may be practical to mount the unit inside the cabin, near the steering column as the headlight and ignition wiring will both be present in that area. Otherwise, the unit is probably best located near the headlight relay.

While the wiring will vary from vehicle to vehicle, you can refer to Figs.4(a) & (b) as a guide. These are simplified conceptual diagrams but show the general arrangement to be expected.

Fig.4(a) shows the wiring when dual-filament headlight bulbs are used, such that only one filament can be powered at a time. Fig.4(b) shows what to expect when the low and high beam lamps are separate bulbs (possibly in separate housings).

Once you have chosen a location and figured out how to attach the unit to the chassis, you will then need to decide where to position the LDR. In cars that have automatic headlights, this is usually located on top of the dash binnacle so that it 'looks out' through the windscreen. The problem is, trying to retrofit a sensor in this position can be almost impossible in modern cars, especially if you also have to run a wire through the firewall in order to connect it to the controller.

If you are mounting the controller in the engine compartment, then the easiest place to mount the LDR will probably be in the plenum chamber (ie, the chamber below the windscreen wipers that's used to drain water from the windscreen). The LDR will have to be suitably waterproofed using heatshrink tubing and silicone and

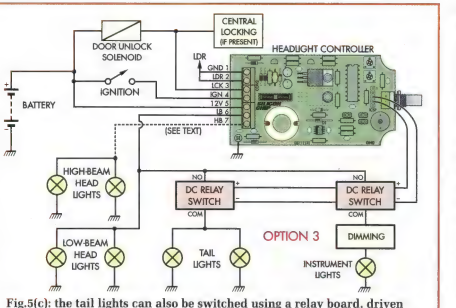

Fig.5(c): the tail lights can also be switched using a relay board, driven from the same microcontroller outputs. This has the advantage that there is no loss in brightness due to the relay and the tail lights will now remain off when the daytime running lights are on.

should be connected to the controller via a shielded lead (shield to GND).

Position the LDR so that its surface has a clear view of the ambient light. Depending on the arrangement, the LDR can then be secured in place using cable ties or perhaps silicone. You could also glue a piece of clear plastic on top of it, to protect the sensor element.

Another possibility is to secure the LDR so that it looks out through the front grille but again, make sure it is waterproofed.

Alternatively, if the controller is to be mounted under the dashboard (eg, in an older car), then it should be possible to mount the LDR next to the windscreen. It might even be possible to attach it to a mobile phone mounting bracket.

Having mounted the control unit and LDR, make the following connections (see Fig.5(a)):

(1) Run a wire from the unit's metal case to a chassis ground point. Alternatively, you could connect a ground wire to pin 1 of CON2 and run it out through the upper cable gland.

(2) Connect the 15A wire from pin 6 of CON2 (white) to the positive (switched) side of the low beam headlights, either to the lights themselves, the headlight wiring or the control relay/switch.

(3) Connect the 15A wire from pin 5 of CON2 (red) to the positive terminal of the car's battery. It's probably a good idea to do this via the vehicle's headlight fuse, even though there is an on-board fuse. This connection can be made to the battery side of the vehicle's headlight relay/switch.

(4) If you determined earlier that you need the high-beam sensing wire, connect pin 7 of CON2 to the switched high beam +12V line. Otherwise leave pin 7 of CON2 open.

(5) Connect the LDR across the inner and outer conductors of the shielded cable (ie, between pin 1 of CON2 [GND] and pin 2).

(6) Wire the vehicle's switched ignition line to pin 3 of CON2. Note that many vehicles have two such lines; one is disconnected during 'cranking' while the other isn't. We recommend the latter but you can use the former in which case you may also want to disable the 'coming home' feature (ie, leave JP1 out).

(7) Optional – make a connection from pin 2 of CON2 to the driver's door central locking solenoid. There will be three wires going to the solenoid – one connected to +12V and two which are pulled low, one to lock the door and one to unlock it. Connect the wire to the unlock line.

Tail & instrument lights

The unit should now be able to switch the headlights on in the dark but note that, in most vehicles, the tail and instrument (dashboard) lights are wired independently of the headlights. This is because switching on the parking lights also switches on the tail lights (and number plate lamp). In some cases, the tail lights may even be switched on individually when parked (ie, only the side facing the road).

Ideally, all these lights come on automatically. The simplest solution is to use two or three power diodes so that when voltage is supplied to the headlights, it also flows to the tail and instrument lights without the reverse necessarily being true.

Typical light wattages are as follows: headlights 2 x 55W, tail lights 2 x 5W, number plate lamp 6W and instruments 3-4W for a total of 130W (nominal). The controller can supply enough current to run them all.

The simplest arrangement is shown in Fig.5(a). Basically, it's just a matter of connecting the diodes with their anodes from the switched headlight +12V line to the positive (switched) side of the tail lights and instrument lights. When driven by this unit, they will receive a lower voltage than the headlights (by about 0.7V) however this should still be sufficient. If you wish, you can reduce the voltage drop by using 3A Schottky diodes instead (1N5822).

Either way, the diodes can be soldered in-line with the wiring, covered with heatshrink tubing and then strapped to the wiring loom with cable ties, so they don't float around.

Relay switching

Using diodes means that the tail and instrument lights will also be powered (at reduced brightness) during the day with daytime running lights. This is probably desirable for the tail lights but it could be detrimental to instrument visibility.

If you want to prevent this, rather than using diodes, use a relay or relays to switch the tail and/or instrument lights. IC1 brings pins 4 & 5 of the ICSP header high when the controller turns the headlights on at full brightness. The adjacent pin 3 is connected to ground.

Thus, you can connect a thin figure-8 or shielded cable to pins 3 & 4 and run this out via the upper cable gland to a relay board. Our DC Relay Switch (Silicon Chip, November 2006) is suitable and is available as a kit from Jaycar (KC5434). By using the control

The completed unit can be waterproofed by smearing silicone around the inside of VR1's mounting hole, the cable glands and the edge of the lid.

signal from the controller, this can then be used to switch the tail and/or instrument lights on at night.

High beams

This unit should not be connected so as to turn on the high beams automatically. **In most cases, it will be necessary for the driver to turn on the headlights manually in order to be able to activate the high-beams, using a stalk on the steering column.**

In some cases, it may be possible to wire the unit so that it can power either the low or high beams depending on the position of the steering column stalk but make sure that for vehicles where both lamps are lit simultaneously, the unit will not be driving both unless they are within its current and power ratings, which is quite unlikely.

Headlight brightness

In a typical situation, the voltage loss across the unit with the headlights on is around 0.25V. This is low enough that no reduction in brightness should be apparent, although you may notice that the lights are slightly brighter when switched on manually.

The 15 turns specified for inductor L2 is a compromise; with 10 turns, the voltage loss is a little lower (and thus headlight brightness higher) but the reduction in filtering causes some (barely detectable) AM radio interference. While we don't think this level of interference will cause any real problems, we have specified 15 turns just to be safe.

If you are unhappy with the resulting brightness, you can reduce the number of turns on L2, especially if you are in an urban area where radio signals are strong.

Defeat switch

Note that while you can still manually switch the headlights to come on, you can't turn them off if the Automatic Headlight Controller unit decides they should be on. This should not be an issue but it would be possible to wire up a 'defeat' switch in series with the switched ignition line. However be careful if you do this since it would be possible to turn it off and forget, thus defeating the purpose of the unit!

Final adjustments & testing

As mentioned, VR1 sets the light sensitivity threshold while VR2 sets the daytime running lights brightness (full anti-clockwise disables them). VR3 adjusts the switch-off delay.

Since the light sensitivity is the most critical setting, VR1 is externally accessible. For default settings, start with VR1 at about 10 o'clock, VR2 at about 2 o'clock and VR3 about 12 o'clock.

If you find it's getting dark and the lights haven't come on, turn VR1 clockwise. If they come on when it's still too light, turn VR1 anti-clockwise. If the lights turn off too quickly when moving through lit areas at dawn or dusk, turn VR3 clockwise. Conversely, if the lights stay on too long (eg, when coming out of a tunnel), turn VR3 anti-clockwise.

Finally, if the daytime running lights brightness is too high or low, adjust VR2.

When you have the unit up and running, cover the LDR so that it is dark and check that all the required lights come on properly, ie, low-beam headlights, tail lights, instrument lights and number plate light(s). These are all required to be lit while driving at night. Also check that the high beams do not turn on automatically but that they can still be activated; as mentioned earlier, you may have to switch the lights manually to the "on" position before the high beams will operate.

Finally, note that you may still need to turn the lights on manually when there is reduced visibility due to rain, mist or fog if the ambient light level is still high. SC

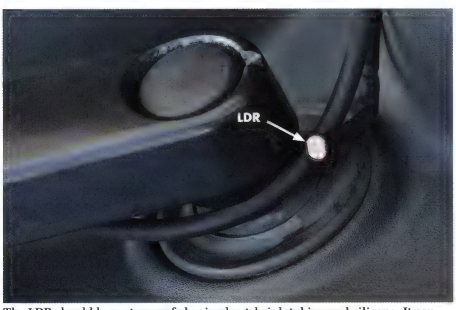

The LDR should be waterproofed using heatshrink tubing and silicone. It can be mounted in the plenum chamber and secured to an adjacent washer hose or to some other convenient point using cable ties.

YOUR CHOICE

That's what it's all about. . .

Now that the new SILICON CHIP website is up and running, your choices have never been wider when it comes to the way you subscribe. Subscriptions are available for 6, 12 and 24 months.

WANT TO SUBSCRIBE TO THE PRINT EDITION ONLY (as you've always done)? No worries!
WANT TO SUBSCRIBE TO THE ON-LINE EDITION ONLY (it's all new!)? No worries!
WANT TO SUBSCRIBE TO BOTH THE PRINT EDITION AND THE ON-LINE EDITION? No worries!

And that's what makes your choices even more valuable.
Say you're away from home when your printed copy is normally delivered. . .
Say you want to look up something # in SILICON CHIP from a previous issue when you're at work . . .
Say you want to search # for a particular project or feature from any issue. . .
No worries — even if you're on the other side of the world, you can read – in full – the current issue of SILICON CHIP with a desktop, laptop, notebook or tablet PC* – anywhere you can access the 'net.
And this convenience comes at a very small premium over the printed subscription price.

PLUS! While ever your subscription is current, you can download software, PCB patterns, front panel artwork, etc, FREE OF CHARGE!

Here's the deal:

Full access to articles requires subscription. Search facilities do not.
* Must be capable of running Adobe Flash

IF YOU'RE IN AUSTRALIA you can subscribe to the print edition (only) of **SILICON CHIP** for $105.00 for a full year – 12 issues (that's almost $15 less than the over-the-counter price – and we pay the postage!)
FROM ANYWHERE IN THE WORLD, you can subscribe to the on-line edition (only) of **SILICON CHIP** for $AU85.00 for 12 issues. (Of course, you can also subscribe to the printed edition outside Australia).
Or in Australia you can subscribe to BOTH the print edition AND the on-line edition, for the ultimate in versatility, for just $125.00 (yes, that's only $20 over the print edition subscription price). That's a very handy option for anyone who is travelling – read **SILICON CHIP** online from anywhere in the world!
You can also convert from a printed edition or on-line edition to a combined edition if you wish.
There are many other options available, such as shorter or longer subscription (eg, 6 and 24 months), New Zealand/other overseas offers, subs with binders (Australia only) and so on.
There are far too many to list here – they're fully explained on the "subscriptions" page on the website:

www.siliconchip.com.au

Vintage Radio

By Leith Tebbit

A rare 1929 AWA C54 Radiola set rescued from oblivion

Some vintage radios are in such a dilapidated state when discovered that you wonder why anyone would even attempt to restore them. Such was the case with this rare AWA C54 – its cabinet was badly water-damaged and the chassis was dirty, dusty and rusting.

RADIOS FROM THE 1920s, such as the AWA C54, are now hard to find, with occasional exciting exceptions making collecting worthwhile. This particular discovery was made back in May 2012 during a trip from Queensland to Nowra in NSW. We were passing through a little village called Wingen on the New England Highway (near Scone) and decided to visit an excellent secondhand and antique business.

When I visit such places, I always ask "do you have any old radios that aren't in good condition or are not operating, in particular vintage valve radios?" In this case, the proprietor declared "yes, out in the back shed".

It's hard to describe the condition of the decrepit old AWA C54 console we found there. It was extremely dusty and dirty and on first sight, it was a "no-go zone". The console originally came from the Tamworth district before spending the last six years in its present location.

On closer inspection, it was obvious it wouldn't be just a clean, dust and repair project, as there was considerable damage to the cabinet itself. The chassis components were all there though, which was encouraging, although the corroded metalwork, and especially the tuning capacitors, would be a challenge. The asking price was $200 which I thought was very reasonable considering that I've seen several TRF chassis alone (ie, without a cabinet) sell for well over that figure.

Despite the dilapidated condition of the cabinet, it was well within my capabilities, as I'm a woodworking enthusiast. Restoring it to its former glory would be a monumental task but once finished, it would make a very nice addition to my collection.

On the plus side, the front speaker grille, dial-scale and controls were all in reasonable condition due to the fact that the console's bat-wing doors had been closed during storage. But that's where the good news ended. Pieces were missing from the turned cabinet legs due to the animal-based glue crystallising, while the lower battery compartment had been severely damaged following leakage from the lead-acid "A" filament supply battery. In addition, some parts were missing from the battery compartment.

The accompanying photos of the radio chassis and upper battery storage compartment show the condition they were in – and that's after the removal of a hornets' nest that occupied much of the inside of the cabinet. Surprisingly, there was no sign of spiders or other

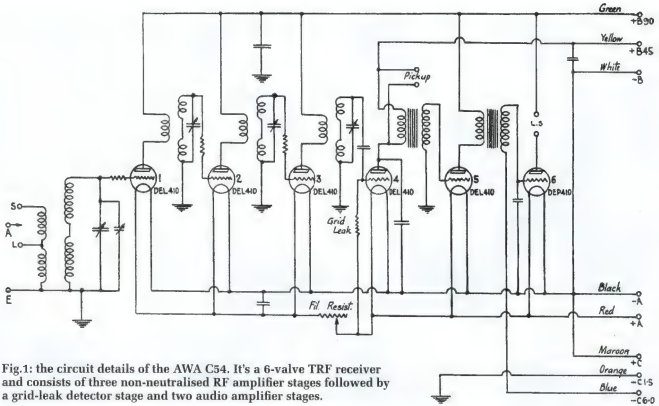

Fig.1: the circuit details of the AWA C54. It's a 6-valve TRF receiver and consists of three non-neutralised RF amplifier stages followed by a grid-leak detector stage and two audio amplifier stages.

pests that are normally found inside a cabinet of this age. Perhaps the hornets had kept them at bay!

Circuit details

Fig.1 shows the circuit details of the C54. It's a 6-valve TRF receiver and is similar to the 1928 C50 model, except that "losser" (or stopper) resistors are used whereas in the C50, the RF stages were neutralised using capacitors. A likely reason for this is that AWA was unwilling to pay the necessary licence fee to Hazeltine to use their neutralisation patent.

In addition, the C54 receiver was a very different mechanical design to the C50. It bore a striking resemblance to the Atwater Kent model 33, with its L-shaped metal chassis, binocular coils and losser resistors in the RF grid circuits, among other things. The Atwater Kent 33 came out in 1927 and must have inspired AWA's designers during 1928.

In summary, stages 1-3 are non-neutralised RF amplifier stages with series resistors between the tuned circuit and the grid of each valve to ensure stability. This, combined with a fairly small number of turns on the primary of each coupling transformer, resulted in adequate gain without instability.

The 84-year-old AWA C54 was obtained by the author in very poor condition, with a badly water-damaged cabinet and a dirty, rusting chassis. Restoring it to full working condition was a monumental task.

The "binocular" coils limited their external field and allowed them to be used without any screening between the RF stages. This differed from the C50 which was also known as the "screened six" because each RF stage was mounted in its own screened compartment.

Stage 4 is a grid-leak detector with no regeneration, while stage 5 is the first audio stage. This is then followed by the audio output stage (stage 6).

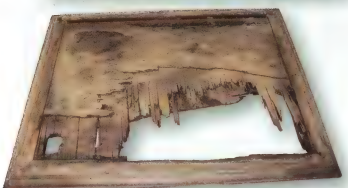

These four photos illustrate the damage to the loudspeaker (top, left), the chassis and the cabinet of the old C54 radio. Many of the cabinet sections had to be remade.

It's interesting to note that the chassis is connected to the -1.5V tap of the bias (C) battery, resulting in the negative side of the filament (A) battery being 1.5V above the chassis. This was done so that the three RF stages could be biased with the bottom ends of their coils and tuning capacitors grounded directly to the chassis.

The rheostat in the filament supply to the RF stages serves as the volume control, a popular method in the 1920s. This simple scheme generally worked well with valves with thoriated filaments such as the 01A and 99 but was not very satisfactory with oxide-coated valves as used in this set.

Basically, it worked OK but it shortened the life of the valves by poisoning the emitting material. Oxide-coated cathodes did not like operating in saturated mode, particularly with the relatively high plate voltage used in this set.

The pick-up connection to the primary of the first audio transformer was fairly standard and the small amount of current running through the pick-up coil (which had 45V on it) didn't seem to affect the operation.

The author's home-made copy wood lathe came in handy when it came to making new sections for the turned legs that are fitted to the cabinet.

Restoration

I started the restoration by lightly dusting the chassis and cabinet using a soft brush and a low-pressure compressed-air nozzle. A brush gives much better control and has less chance of damaging components than heavy-handed cleaning using a cloth.

That done, I removed the set's TRF (tuned radio frequency) chassis and a quick inspection revealed severely corroded metalwork, plus oxidised brass and copper components. By now, it was obvious that a considerable

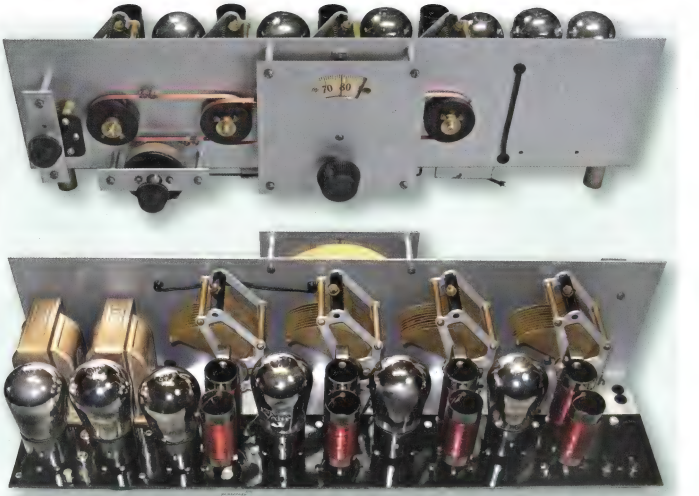

These two views show the fully-restored chassis of the AWA C54 Radiola. The metalwork, including the four tuning capacitors, had to be dismantled and bead-blasted to get everything looking like new again.

amount of work would be required to restore the chassis. The good news was that all the components appeared to be in their original condition and in position.

As previously indicated, the cabinet was in poor condition and there was no choice but to completely disassemble it in order to restore the severely water-damaged veneer panels and to replace missing parts. But that was easier said than done, as pulling it apart without inflicting further damage took considerable effort and patience.

Each section had to be slowly wriggled apart until there was a sufficient gap to use a fine metal saw to cut the original nails and wooden dowels. Basically, it was better to sacrifice the dowels rather than damage other parts during the cabinet disassembly. Fortunately, some sections came apart easily due to the original glue breaking down.

As well as using a small hacksaw blade, I also used a very fine metal-cutting oscillating blade fitted to an electric multi-tool to cut the dowels and nails, while a rubber mallet also came in handy to gently "persuade" the sections to separate. Naturally, any missing or damaged pieces would have to be re-manufactured.

Surprisingly, the solid timber parts were in reasonable condition, with no severe chips or bruising, leaving only minor dents to be filled. However, the weathered and aged ply veneered panels were nowhere near as simple to repair.

Water damage to the front of the bat-wing doors and the radio compartment lid meant that major restoration work was required on these parts. The lid had missing veneer and had separated from the ply panel in quite a few places as well. Fortunately, the two side panels of the cabinet were in reasonable condition and only required routine sanding and filling of small imperfections.

Once the cabinet had been completely dismantled and these repairs completed, there was no turning back. The legs had been damaged, so new sections were manufactured, using a copy wood lathe I made several years ago. This lathe not only made it much easier to make the parts but also enabled them to be virtually exact.

The upper sections of the turned legs were fabricated from four separate pieces, each glued to a central leg component. This made it possible to turn such a large section without using a single piece of solid timber, thereby conserving material.

Melunak timber was used to re-manufacture the missing or damaged components. It's the first time I'd used it and it's very much like teak, with a very similar grain (it's hard to detect the difference, in fact). It machines cleanly without any tearing of the grain, after which it's possible to give the timber a light sanding and apply sanding sealer directly. Most of the new parts were given two or three coats of sanding sealer and I sanded back with 320 grain dry paper between coats.

The lid of the cabinet had to be com-

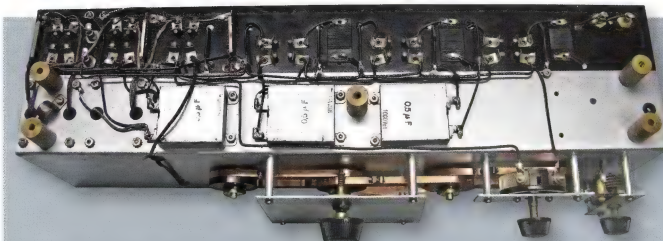

The underside of the C54's chassis is relatively uncluttered, with point-to-point wiring between the valve sockets, coils and other parts. Note the copper bands used to couple the dial-drive pulleys.

pletely re-manufactured. First, a timber frame was fabricated using a router, then reassembled using the more modern biscuit-jointing method. This then became the base onto which the veneer panels were glued, with the frame edge around the panel enabling better machining, rather than trying to machine across the ply panel's grain when finishing off the edge.

Using biscuit-jointing, rather than the nails and staples used in the original assembly, makes it easier to align the parts while re-gluing. Also, you can test-assemble the various parts prior to the final gluing process, to ensure no imperfections have been missed during restoration.

That done, the lower battery compartment was also completely re-manufactured, since there appeared to be no other alternative. The restored cabinet parts were then finished with Nitrocellulose HY-Tech 70% Matt Sheen Pre-Catalysed Lacquer. This involved applying three coats with sanding between coats using 400 grit dry paper.

In 1929, AWA assembled the cabinet prior to applying the finishing coats. In my case, the finishing coats were completed prior to the final assembly. As a bonus, biscuit joints don't have nail-holes or staples that need filling. However, it was necessary to thoroughly remove any excess glue immediately after clamping the components tightly together, to ensure a near-perfect joint.

Restoring the chassis

Because of its poor state, I began the chassis restoration by first taking a series of photos before removing all the parts. I then glass-bead blasted all the metalwork, including the tuning capacitors and the speaker components. Surprisingly, the speaker had no obvious damage whatsoever to the cone! There was not one hole to be seen, which is quite incredible considering the age of radio, although the back protection cloth was almost non-existent.

The balanced magnetic speaker arm was also disassembled in order to glass-bead blast the iron surfaces and coils. It's worth noting that the text stamped into the coil former was still intact after this process, indicating just how "gentle" glass-bead blasting can be at low pressures. Basically, it removes the rust and dirt while leaving delicate text and markings. It's a slow process but well worth doing in cases like this.

Following this bead-blasting process, a fine film of Penetrol oil was applied to the metal chassis, tuning condensers and the surfaces of all Bakelite components.

This close-up view shows how the copper bands used to couple the dial-drive pulleys are joined together and tensioned.

Open-circuit inductor

Having cleaned the chassis, I began making a few continuity checks on the major parts and discovered that the inductor in the LC network on the side of the speaker housing was open circuit. As a result, I carefully melted the black pitch from the container using a hot-air gun to reveal the components. This revealed that the internal solder connections to the terminals were open circuit, so it turned out to be an easy repair.

Fortunately, the audio-coupling and

output transformers were all intact and in good working order. They only needed repainting to restore their appearance.

Other repairs included replacing the valves in the first TRF and audio output stages. The 800Ω series grid resistor in the second TRF stage also required attention, since it had gone open circuit. This resistor is wound on a Bakelite former, so it was possible to unwind part of the resistance wire and re-solder the faulty joint.

No capacitors had to be replaced, as they all tested and performed perfectly. The set is battery-operated, so there were no electrolytic capacitors to cause problems. Even so, the fact that the other capacitors were all OK is amazing considering that the set was manufactured in 1929!

Despite the pure simplicity of the chassis, this was one of the most involved chassis restoration projects I've ever attempted. That's basically because all the parts had to be removed prior to cleaning the chassis. Every wire and connection had to be de-soldered and each connection then cleaned and/or glass-bead blasted.

Each wire was then cleaned and re-soldered back in place using the photos taken earlier as a reference. Fortunately, no rubber-covered wires were used, except for the DC battery harness, so the original wiring was largely retained.

Aligning the tuning capacitors

The four variable tuning capacitors were aligned by first setting the dial indicator to "0" and all the gangs to their fully open position with their set-screws tightened. I then tuned through their range to find a weak local station, before individually loosening the set-screw for each tuning gang in turn and rotating its shaft back and forth to peak the received signal.

This alignment procedure was carried out by working backwards from the output end of the receiver towards the front-end stages.

Once completed, this process was repeated, again by first tuning into a weak station. There appears to be no difference between tuning from the antenna RF stages to the final stages or in the opposite direction as described above. However, starting from the final stage and working towards the front is usually the way most radios are tuned. TRF receivers with coil-coupling adjustments are generally much more complicated to tune but in this AWA C54 set, the coils cannot be adjusted.

A major part of the restoration involved rebuilding the cabinet. This view shows the various pieces, many of them completely re-made, before the final assembly.

Copper bands are used as belts to couple the drive pulleys. Each pulley has a hole in its centre for a location pin, thereby eliminating any slippage once the belt is tightened by small cylindrical clamps.

When I first reassembled the tuning capacitors, I didn't realise that the unit in the first TRF stage used a different stator to compensate for the antenna circuit. As a result, it wound up in the wrong place which meant that I was initially unable to get the TRF stages to track properly across the entire RF band.

When I eventually corrected this error, the receiver performed extremely well right across the band using just a short antenna. In fact, the old TRF set picks up 12 stations without any drift or fading – an outstanding result considering we are dominated by a very high-power ABC transmitter only 2km from our location in Dalby, Queensland.

Once the chassis restoration had been completed, the receiver was fitted into the top compartment of the cabinet. The finished cabinet really looks the part and the veneer on the inside of the lift-up lid is joined in the middle for a mirror pattern-match, producing a diamond shape pattern on both the top and bottom. The hinges, handles and latches were also all fully restored.

The battery compartment now has an illustration only of the dry battery pack that was originally used. Batteries are no longer used to power this set. Instead, power is now supplied from a custom-built mains power supply.

The result

The accompanying photos show the finished result. This is the first TRF receiver I've restored and I can only imagine the pride its original owner must have had for the set – the more so given its performance and ease of operation due to the coupled tuning capacitors which were all controlled by a single knob. The quality of the audio from the efficient moving-iron speaker is also very good and it's all built into a very elegant cabinet.

I never expected this restoration project would end up in Melbourne at the 30th Anniversary of the Historical Radio Society of Australia (HRSA) in September 2012. When three members of the HRSA encouraged me to enter it for the Ray Kelly award, I only had two weeks left to complete the project, build a multi-voltage power supply and travel to Melbourne. The set won the Ray Kelly "best in show" award, so the effort was well worthwhile.

Acknowledgement: photographs and text edited by Kevin Poulter; circuit description by Mike Osborne. SC

SILICON CHIP .com.au/shop ONLINESHOP

Looking for a specialised component to build that latest and greatest *Silicon Chip* project? Maybe it's the PCB you're after. Or a pre-programmed micro. Or some other hard-to-get "bit". The chances are they are available direct from the **Silicon Chip ONLINESHOP**.

As a service to readers, **Silicon Chip** has established the **ONLINESHOP**. No, we're not going into opposition with your normal suppliers – this is a direct response to requests from readers who have found difficulty in obtaining specialised parts such as PCBs & micros.

- PCBs are normally IN STOCK and ready for despatch when that month's magazine goes on sale (you don't have to wait for them to be made!).
- Even if stock runs out (eg, for high demand), in most cases there will be no longer than a two-week wait.
- One low p&p charge: $10 per order, regardless of how many boards or micros you order! (**Australia only**; overseas clients – email us for a postage quote).
- Our PCBs are beautifully made, very high quality fibreglass boards with pre-tinned tracks, silk screen overlays and where applicable, solder masks.
- Best of all, those boards with fancy cut-outs or edges are already cut out to the *SILICON CHIP* specifications – no messy blade work required!

HERE'S HOW TO ORDER:

VISA MasterCard PayPal

Via the INTERNET (24 hours, 7 days)
Log on to our secure website: siliconchip.com.au, click on "SHOP" and follow the links

Via EMAIL (24 hours, 7 days)
email silicon@siliconchip.com.au – Clearly tell us what you want and include your contact and credit card details

Via FAX (24 hours, 7 days)
(02) 9939 2648 (INT: 612 9939 2648). Clearly tell us what you want and include your contact and credit card details

Via MAIL (24 hours, 7 days)
PO Box 139, Collaroy NSW 2097. Clearly tell us what you want and include your contact and credit card details

Via PHONE (9am-5pm, Mon-Fri)
Call (02) 9939 3295 (INT 612 9939 3295) – have your order ready, including contact and credit card details!

YES! You can also order or renew your Silicon Chip subscription via any of these methods as well!

PRE-PROGRAMMED MICROS

Price for any of these micros is just $15.00 each + $10 p&p per order#

As a service to readers, **Silicon Chip OnlineShop** stocks microcontrollers and microprocessors *used in new projects* (from 2012 on) and some selected older projects – **pre-programmed and ready to fly!** *Some micros from copyrighted and/or contributed projects may not be available.*

PIC12F675-I/P	UHF Remote Switch (Jan09), Ultrasonic Cleaner (Aug10), Ultrasonic Anti-fouling (Sep10), Cricket/Frog (Jun12) Do Not Disturb (May13) IR-to-UHF Converter (Jul13), UHF-to-IR Converter (Jul13) PC Birdies *2 chips – $15 pair* (Aug13)	PIC18F45K80	USB Power Monitor (Dec12)
		PIC18F4550-I/P	GPS Car Computer (Jan10), GPS Boat Computer (Oct10)
PIC16F1507-I/P	Wideband Oxygen Sensor (Jun-Jul12)	PIC18F14K50	USB MIDIMate (Oct11)
PIC16F88-E/P	Hi Energy Ignition (Nov/Dec12), Speedo Corrector (Sept13), Auto Headlight Controller (Oct13)	PIC18F1320-I/SO	USB Data Logger (Dec10-Feb11)
		PIC18LF14K22	Intelligent Dimmer (Apr09)
PIC16F88-I/P	Projector Speed (Apr11), Vox (Jun11), Ultrasonic Water Tank Level (Sep11), Quizzical (Oct11) Ultra LD Preamp (Nov11) 10-Channel Remote Control Receiver (Jun13) Revised 10-Channel Remote Control Receiver (Jul13)	PIC18F1320-I/SO	Digital Spirit Level (Aug11), G-Force Meter (Nov11)
		PIC32MX795F512H-80I/PT	Maximite (Mar11), miniMaximite (Nov11), Colour Maximite (Sept/Oct12)
PIC16LF88-I/P	Garbage Reminder (Jan13)	dsPIC33FJ128GP802-I/SP	Digital Audio Signal Generator (Mar-May10); Digital Lighting Controller (Oct-Dec10), SportSync (May11), Digital Audio Delay (Dec11) Level (Sep11) Quizzical (Oct11); Ultra-LD Preamp (Nov11), LED Musicolor (Nov12)
PIC16LF88-I/SO	LED Ladybird (Apr13)	dsPIC33FJ64MC802-E/P	Induction Motor Speed Controller (revised) (Aug13)
PIC16F877A-I/P	6-Digit GPS Clock (May-Jun09), Lab Digital Pot (Jul10) Semtest (Feb-May12)	dsPIC33FJ128GP306-I/PT	CLASSIC DAC (Feb-May 13)
		ATTiny861	VVA Thermometer/Thermostat (Mar10), Rudder Position Indicator (Jul11)
PIC18F2550-I/SP	Batt Capacity Meter (Jun09), Intelligent Fan Controller (Jul10)	ATTiny2313	Remote-Controlled Timer (Aug10)
		ATMega48	Stereo DAC (Sep-Nov09)

When ordering, be sure to nominate BOTH the micro required AND the project for which it must be programmed.

10/13

SPECIALISED COMPONENTS, SHORT-FORM KITS, ETC

P&P – $10 Per order#

RF Probe All SMD parts (Aug13) **$5.00**

G-FORCE METER/ACCELEROMETER Short form kit (Aug11/Nov11) ~~$44.00~~ **$40.00**
(contains PCB (04108111), programmed PIC micro, MMA8451Q accelerometer chip and 4 Mosfets)

DIGITAL SPIRIT LEVEL Short form kit (Aug11/Nov11) ~~$44.00~~ **$40.00**
(contains PCB (04108111), programmed PIC micro, MMA8451Q accelerometer chip and 4 Mosfets)

CLASSIC DAC Semi kit (Feb-May13) **$45.00**
Includes three hard-to-get SMD ICs: CS8416-CZ, CS4398-CZZ and PLL1708DBQ plus an accurate 27MHz crystal and ten 3mm blue LEDs with diffused lenses

"LUMP IN COAX" MINI MIXER SMD parts kit: (Jun13) **$20.00**
Includes: 2 x OPA4348AID, 1 x BQ2057CSN, 2 x DMP2215L, 1 x BAT54S, 1 x 0.22Ω shunt

LF-HF UP-CONVERTER SMD parts kit: (Jun13) **$15.00**
Includes: FXO-HC536R-125 and SA602AD and all SMD passive components

ISL9V5036P3 IGBT (Nov/Dec12) **$10.00**
As used in high energy ignition and Jacob's Ladder (Feb13)

2.5GHz Frequency Counter 3 x 4-digit blue LED displays (Dec12/Jan13) **$15.00**
ERA-2SM+ Wideband MMIC and ADCH-80+ Wideband Choke **$15.00**

IPP230N06L3 N-Channel logic level Mosfets **$5.00**
As used in a variety of Silicon Chip Projects (Pack of 2)

ZXCT1009 Current Shunt Monitor IC (Oct12) **$5.00**
As used in DCC Reverse Loop Controller/Block Switch (Pack of 2)

SMD parts for SIDRADIO (Oct13)
Same as LF-UP Upconverter parts but includes 5V relay and BF998 dual-gate Mosfet. **$20.00**

LF-HF Up-converter Omron G5V-1 5V SPDT 5V relay (June13) **$2.00**

TENDA USB/SD AUDIO PLAYBACK MODULE (TD896 *or* 898) (Jan12) **$33.00**

JST CONNECTOR LEAD 3-WAY (Jan12) **$4.50**

JST CONNECTOR LEAD 2-WAY (Jan12) **$3.45**

RADIO & HOBBIES ON DVD-ROM (Needs PC to play!) n/a **$62.00**

LOOKING FOR TECHNICAL BOOKS? YOU'LL FIND THE COMPLETE LISTING OF ALL BOOKS AVAILABLE IN THE SILICON CHIP ONLINE BOOKSTORE – ON THE "BOOKS & DVDs" PAGES OF OUR WEBSITE

*All items subject to availability. Prices valid for month of magazine issue only. All prices in Australian dollars and included GST where applicable. **# P&P prices are within Australia. O'seas? Please email for a quote***

PRINTED CIRCUIT BOARDS

NOTE: These listings are for the PCB only – *not a full kit.* If you want a kit, contact the kit suppliers advertising in this issue. Prices in £/€/EER are now lower prices: buy now while stocks last!

PRINTED CIRCUIT BOARD TO SUIT PROJECT:	PUBLISHED:	PCB CODE:	Price:
AM RADIO TRANSMITTER	JAN 1993	06112921	$25.00
CHAMP: SINGLE CHIP AUDIO AMPLIFIER	FEB 1994	01102941	$5.00
PRECHAMP: 2-TRANSISTOR PREAMPLIER	JUL 1994	01107941	$5.00
HEAT CONTROLLER	JULY 1998	10307981	$10.00
MINIMITTER FM STEREO TRANSMITTER	APR 2001	06104011	$25.00
MICROMITTER FM STEREO TRANSMITTER	DEC 2002	06112021	$10.00
SMART SLAVE FLASH TRIGGER	JUL 2003	13107031	$10.00
12AX7 VALVE AUDIO PREAMPLIFIER	NOV 2003	01111031	$25.00
POOR MAN'S METAL LOCATOR	MAY 2004	04105041	$10.00
BALANCED MICROPHONE PREAMP	AUG 2004	01108041	$25.00
LITTLE JIM AM TRANSMITTER	JAN 2006	06101062	$25.00
POCKET TENS UNIT	JAN 2006	11101061	$25.00
STUDIO SERIES RC MODULE	APRIL 2006	01104061	$25.00
ULTRASONIC EAVESDROPPER	AUG 2006	01208061	$25.00
RIAA PREAMPLIFIER	AUG 2006	01108061	$25.00
GPS FREQUENCY REFERENCE (A) (IMPROVED)	MAR 2007	04103073	$30.00
GPS FREQUENCY REFERENCE DISPLAY (B)	MAR 2007	04103072	$20.00
KNOCK DETECTOR	JUNE 2007	05106071	$25.00
SPEAKER PROTECTION AND MUTING MODULE	JULY 2007	01207071	$20.00
CDI MODULE SMALL PETROL MOTORS	MAY 2008	05105081	$15.00
LED/LAMP FLASHER	SEP 2008	11009081	$10.00
12V SPEED CONTROLLER/DIMMER (Use Hot Wire Cutter PCB from Dec 2010 [18112101])			
USB-SENSING MAINS POWER SWITCH	JAN 2009	10101091	$45.00
DIGITAL AUDIO MILLIVOLTMETER	MAR 2009	04103091	$25.00
INTELLIGENT REMOTE-CONTROLLED DIMMER	APR 2009	10104091	$10.00
INPUT ATTENUATOR FOR DIG. AUDIO M'VOLTMETER	MAY 2009	04205091	$10.00
6-DIGIT GPS CLOCK	MAY 2009	04105091	$30.00
6-DIGIT GPS CLOCK DRIVER	JUNE 2009	07106091	$20.00
UHF ROLLING CODE TX	AUG 2009	15008091	$10.00
UHF ROLLING CODE RECEIVER	AUG 2009	15008092	$45.00
6-DIGIT GPS CLOCK AUTODIM ADD-ON	SEPT 2009	04208091	$5.00
STEREO DAC BALANCED OUTPUT BOARD	JAN 2010	01101101	$25.00
DIGITIAL INSULATION METER	JUN 2010	04106101	$25.00
ELECTROLYTIC CAPACITOR REFORMER	AUG 2010	04108101	$40.00
ULTRASONIC ANTI-FOULING FOR BOATS	SEP 2010	04109101	$25.00
HEARING LOOP RECEIVER	SEP 2010	01209101	$25.00
S/PDIF/COAX TO TOSLINK CONVERTER	OCT 2010	01210101	$10.00
TOSLINK TO S/PDIF/COAX CONVERTER	OCT 2010	01210102	$10.00
DIGITIAL LIGHTING CONTROLLER SLAVE UNIT	OCT 2010	16110102	$45.00
HEARING LOOP TESTER/LEVEL METER	NOV 2010	01111101	$25.00
UNIVERSAL USB DATA LOGGER	DEC 2010	04112101	$25.00
HOT WIRE CUTTER CONTROLLER	DEC 2010	18112101	$10.00
433MHZ SNIFFER	JAN 2011	06101111	$10.00
CRANIAL ELECTRICAL STIMULATION	JAN 2011	99101111	$25.00
HEARING LOOP SIGNAL CONDITIONER	JAN 2011	01101115	$25.00
LED DAZZLER	FEB 2011	16102111	$20.00
12/24V 3-STAGE MPPT SOLAR CHARGER	FEB 2011	14102111	$15.00
SIMPLE CHEAP 433MHZ LOCATOR	FEB 2011	06102111	$5.00
THE MAXIMITE	MAR 2011	06103111	$15.00
UNIVERSAL VOLTAGE REGULATOR	MAR 2011	18103111	$10.00
12V 20-120W SOLAR PANEL SIMULATOR	MAR 2011	04103111	$10.00
MICROPHONE NECK LOOP COUPLER	MAR 2011	01209101	$25.00
PORTABLE STEREO HEADPHONE AMP	APRIL 2011	01104111	$10.00
CHEAP 100V SPEAKER/LINE CHECKER	APRIL 2011	04104111	$10.00
PROJECTOR SPEED CONTROLLER	APRIL 2011	13104111	$10.00
SPORTSYNC AUDIO DELAY	MAY 2011	01105111	$30.00
100W DC-DC CONVERTER	MAY 2011	11105111	$15.00
PHONE LINE POLARITY CHECKER	MAY 2011	12105111	$10.00
20A 12/24V DC MOTOR SPEED CONTROLLER MK2	JUNE 2011	11106111	$20.00
USB STEREO RECORD/PLAYBACK	JUNE 2011	07106111	$20.00
VERSATIMER/SWITCH	JUNE 2011	19106111	$25.00
USB BREAKOUT BOX	JUNE 2011	04106111	$10.00
ULTRA-LD MK3 200W AMP MODULE	JULY 2011	01107111	$25.00
PORTABLE LIGHTNING DETECTOR	JULY 2011	04107111	$20.00
RUDDER INDICATOR FOR POWER BOATS (4 PCBs)	JULY 2011	20107111-4	$80 per set
VOX	JULY 2011	01207111	$20.00
ELECTRONIC STETHOSCOPE	AUG 2011	01108111	$10.00
DIGITAL SPIRIT LEVEL/INCLINOMETER	AUG 2011	04108111	$10.00
ULTRASONIC WATER TANK METER	SEP 2011	04109111	$20.00
ULTRA-LD MK2 AMPLIFIER UPGRADE	SEP 2011	01209111	$5.00
ULTRA-LD MK3 AMPLIFIER POWER SUPPLY	SEP 2011	01109111	$25.00
HIFI STEREO HEADPHONE AMPLIFIER	SEP 2011	01309111	$20.00
GPS FREQUENCY REFERENCE (IMPROVED)	SEP 2011	04103073	$30.00
HEARING LOOP RECEIVER/NECK COUPLER	OCT 2011	01209101	$10.00
DIGITIAL LIGHTING CONTROLLER LED SLAVE	OCT 2011	16110111	$30.00
USB MIDIMATE	OCT 2011	23110111	$25.00
QUIZZICAL QUIZ GAME	OCT 2011	08110111	$25.00
ULTRA-LD MK3 PREAMP & REMOTE VOL CONTROL	NOV 2011	01111111	$30.00
ULTRA-LD MK3 INPUT SWITCHING MODULE	NOV 2011	01111112	$20.00
ULTRA-LD MK3 SWITCH MODULE	NOV 2011	01111113	$10.00

PRINTED CIRCUIT BOARD TO SUIT PROJECT:	PUBLISHED:	PCB CODE:	Price:
ZENER DIODE TESTER	NOV 2011	04111111	$20.00
MINIMAXIMITE	NOV 2011	07111111	$10.00
ADJUSTABLE REGULATED POWER SUPPLY	DEC 2011	18112111	$5.00
DIGITIAL AUDIO DELAY	DEC 2011	01212111	$25.00
DIGITIAL AUDIO DELAY Front & Rear Panels	DEC 2011	01212112/3	$20 per set
AM RADIO	JAN 2012	06101121	$10.00
STEREO AUDIO COMPRESSOR	JAN 2012	01201121	$30.00
STEREO AUDIO COMPRESSOR FRONT & REAR PANELS	JAN 2012	01201112P1/2	$20.00
3-INPUT AUDIO SELECTOR (SET OF 2 BOARDS)	JAN 2012	01101121/2	$30 per set
CRYSTAL DAC	FEB 2012	01102121	$20.00
SWITCHING REGULATOR	FEB 2012	18102121	$5.00
SEMTEST LOWER BOARD	MAR 2012	04103121	$40.00
SEMTEST UPPER BOARD	MAR 2012	04103122	$40.00
SEMTEST FRONT PANEL	MAR 2012	04103123	$75.00
INTERPLANETARY VOICE	MAR 2012	08102121	$10.00
12/24V 3-STAGE MPPT SOLAR CHARGER REV.A	MAR 2012	14102112	$20.00
SOFT START SUPPRESSOR	APR 2012	10104121	$10.00
RESISTANCE DECADE BOX	APR 2012	04104121	$20.00
RESISTANCE DECADE BOX PANEL/LID	APR 2012	04104122	$20.00
1.5kW INDUCTION MOTOR SPEED CONT. (New V2 PCB)	APR (DEC) 2012	10105122	$35.00
HIGH TEMPERATURE THERMOMETER MAIN PCB	MAY 2012	21105121	$30.00
HIGH TEMPERATURE THERMOMETER Front & Rear Panels	MAY 2012	21105122/3	$20 per set
MIX-IT! 4 CHANNEL MIXER	JUNE 2012	01106121	$20.00
PIC/AVR PROGRAMMING ADAPTOR BOARD	JUNE 2012	24105121	$5.00
CRAZY CRICKET/FREAKY FROG	JUNE 2012	08109121	$10.00
CAPACITANCE DECADE BOX	JULY 2012	04106121	$20.00
CAPACITANCE DECADE BOX PANEL/LID	JULY 2012	04106122	$20.00
W/DEBAND OXYGEN CONTROLLER MK2	JULY 2012	05106121	$20.00
W/DEBAND OXYGEN CONTROLLER MK2 DISPLAY BOARD	JULY 2012	05106122	$10.00
SOFT STARTER FOR POWER TOOLS	JULY 2012	10107121	$10.00
DRIVEWAY SENTRY MK2	AUG 2012	03107121	$25.00
MAINS TIMER	AUG 2012	10108121	$10.00
CURRENT ADAPTOR FOR SCOPES AND DMMS	AUG 2012	04108121	$20.00
USB VIRTUAL INSTRUMENT INTERFACE	SEPT 2012	24109121	$30.00
USB VIRTUAL INSTRUMENT INT. FRONT PANEL	SEPT 2012	24109122	$30.00
BARKING DOG BLASTER	SEPT 2012	25108121	$20.00
COLOUR MAXIMITE	SEPT 2012	07109121	$20.00
SOUND EFFECTS GENERATOR	SEPT 2012	08109121	$10.00
NICK-OFF PROXIMITY ALARM	OCT 2012	03110121	$5.00
DCC REVERSE LOOP CONTROLLER	OCT 2012	09110121	$10.00
LED MUSICOLOUR	NOV 2012	16110121	$25.00
LED MUSICOLOUR Front & Rear Panels	NOV 2012	16110122	$20 per set
CLASSIC-D CLASS D AMPLIFIER MODULE	NOV 2012	01108121	$30.00
CLASSIC-D 2 CHANNEL SPEAKER PROTECTOR	NOV 2012	01108122	$10.00
HIGH ENERGY ELECTRONIC IGNITION SYSTEM	DEC 2012	05110121	$10.00
USB POWER MONITOR	DEC 2012	04109121	$10.00
1.5kW INDUCTION MOTOR SPEED CONTROLLER (NEW V2 PCB)	DEC 2012	10105122	$35.00
THE CHAMPION PREAMP and 7W AUDIO AMP (one PCB)	JAN 2013	01109121/2	$10.00
GARBAGE/RECYCLING BIN REMINDER	JAN 2013	19111121	$10.00
2.5GHz DIGITAL FREQUENCY METER – MAIN BOARD	JAN 2013	04111121	$35.00
2.5GHz DIGITAL FREQUENCY METER – DISPLAY BOARD	JAN 2013	04111122	$15.00
2.5GHz DIGITAL FREQUENCY METER – FRONT PANEL	JAN 2013	04111123	$45.00
SEISMOGRAPH MK2	FEB 2013	21102131	$30.00
MOBILE PHONE RING EXTENDER	FEB 2013	12110121	$10.00
GPS 1PPS TIMEBASE	FEB 2013	04103131	$10.00
LED TORCH DRIVER	MAR 2013	16102131	$5.00
CLASSIC DAC MAIN PCB	APR 2013	01102131	$40.00
CLASSIC DAC FRONT & REAR PANEL PCBs	APR 2013	01102132/3	$30.00
GPS USB TIMEBASE	APR 2013	04104131	$15.00
LED LAZY BIRD	APR 2013	08105131	$10.00
CLASSIC-D 12V to ±35V DC/DC CONVERTER	MAY 2013	11104131	$15.00
DO NOT DISTURB	MAY 2013	12104131	$10.00
LF/HF UP-CONVERTER	JUN 2013	07106131	$10.00
10-CHANNEL REMOTE CONTROL RECEIVER	JUN 2013	15106131	$15.00
IR-TO-455MHZ UHF TRANSCEIVER	JUN 2013	15106132	$7.50
"LUMP IN COAX" PORTABLE MIXER	JUN 2013	01106131	$15.00
L'IL PILER MKII TRAIN CONTROLLER	JUL 2013	09107131	$20.00
L'IL PULSER MKII FRONT & REAR PANELS	JULY 2013	09107132/3	$20.00/set
REVISED 10 CHANNEL REMOTE CONTROL RECEIVER	JULY 2013	15106133	$15.00
INFRARED TO UHF CONVERTER	JULY 2013	15107131	$5.00
UHF TO INFRARED CONVERTER	JULY 2013	15107132	$10.00
IPOD CHARGER	AUG 2013	14108131	$5.00
PC BIRDIES	AUG 2013	08104131	$10.00
RF DETECTOR PROBE FOR DMMs	AUG 2013	04107131	$10.00
BATTERY LIFESAVER	SEPT 2013	11108131	$5.00
SPEEDO CORRECTOR	SEPT 2013	05109131	$10.00
SIDRADIO (INTEGRATED SDR) Main PCB	OCT 2013	06109131	$35.00
SIDRADIO (INTEGRATED SDR) Front & Rear Panels	OCT 2013	06109132/3	$25.00/pr
TINY TIM AMPLIFIER (same PCB as Headphone Amp [Sept'11])	OCT 2013	01309111	$20.00
AUTO CAR HEADLIGHT CONTROLLER	OCT 2013	03111131	$10.00

SILICON CHIP REFERENCE BOOKSHOP

Save 10%

ALL SILICON CHIP SUBSCRIBERS - PRINT, ONLINE OR BOTH - AUTOMATICALLY QUALIFY FOR A 10% DISCOUNT ON ALL BOOK OR PARTSHOP PURCHASES.
(Does not apply to subscriptions)

For the latest titles and information, please refer to our website books page: www.siliconchip.com.au/Shop/Books

PIC MICROCONTROLLERS: know it all

Multiple authors **$85.00**

The best of subjects Newnes authors have written over the past few years, combined in a one-stop maxi reference. Covers introduction to PICs and their programming in Assembly, PICBASIC, MBASIC & C. 900+ pages.

PROGRAMMING and CUSTOMIZING THE PICAXE

By David Lincoln (2nd Ed, 2011) **$65.00***

A great aid when wrestling with applications for the PICAXE series of microcontrollers, at beginner, intermediate and advanced levels. Every electronics class, school and library should have a copy, along with anyone who works with PICAXEs. 300 pages in paperback.

See Review April 2011

PIC IN PRACTICE

by D W Smith. 2nd Edition - published 2006 **$60.00***

Based on popular short courses on the PIC, for professionals, students and teachers. Can be used at a variety of levels. An ideal introduction to the world of microcontrollers. 255 pages in paperback.

PIC MICROCONTROLLER – your personal introductory course

By John Morton 3rd edition 2005. **$60.00***

A unique and practical guide to getting up and running with the PIC. It assumes no knowledge of microcontrollers – ideal introduction for students, teachers, technicians and electronics enthusiasts. Revised 3rd edition focuses entirely on re-programmable flash PICs such as 16F54, 16F84 12F508 and 12F675. 226 pages in paperback.

OP AMPS FOR EVERYONE

By Bruce Carter – 4th Edition 2013 **$83.00***

This is the bible for anyone designing op amp circuits and you don't have to be an engineer to get the most out of it. It is written in simple language but gives lots of in-depth info, bridging the gap between the theoretical and the practical. 281 pages,

PROGRAMMING 32-bit MICROCONTROLLERS IN C

By Luci di Jasio (2008) **$79.00***

Subtitled Exploring the PIC32, a Microchip insider tells all on this powerful PIC! Focuses on examples and exercises that show how to solve common, real-world design problems quickly. Includes handy checklists. FREE CD-ROM includes source code in C, the Microchip C30 compiler, and MPLAB SIM. 400 pages paperback.

PRACTICAL GUIDE TO SATELLITE TV

By Garry Cratt – Latest (7th) Edition 2008 **$49.00**

Written in Australia, for Australian conditions by one of Australia's foremost satellite TV experts. If there is anything you wanted to know about setting up a satellite TV system, (including what you can't do!) it's sure to be covered in this 176-page paperback book.

NEWNES GUIDE TO TV & VIDEO TECHNOLOGY

By KF Ibrahim 4th Edition (Published 2007) **$49.00**

It's back! Provides a full and comprehensive coverage of video and television technology including HDTV and DVD. Starts with fundamentals so is ideal for students but covers in-depth technologies such as Blu-ray, DLP, Digital TV, etc so is also perfect for engineers. 600+ pages in paperback.

RF CIRCUIT DESIGN

by Chris Bowick, Second Edition, 2008. **$63.00***

The classic RF circuit design book. RF circuit design is now more important that ever in the wireless world. In most of the wireless devices that we use there is an RF component – this book tells how to design and integrate in a very practical fashion. 244 pages in paperback.

PRACTICAL RF HANDBOOK

by Ian Hickman. 4th edition 2007 **$61.00***

A guide to RF design for engineers, technicians, students and enthusiasts. Covers key topics in RF: analog design principles, transmission lines, couplers, transformers, amplifiers, oscillators, modulation, transmitters and receivers, propagation and antennas. 279 pages in paperback.

SELF ON AUDIO

by Douglas Self 2nd Edition 2006 **$69.00***

A collection of 35 classic magazine articles offering a dependable methodology for designing audio power amplifiers to improve performance at every point without significantly increasing cost. Includes compressors/limiters, hybrid bipolar/FET amps, electronic switching and more. 467 pages in paperback.

SMALL SIGNAL AUDIO DESIGN

By Douglas Self – First Edition 2010 **$95.00***

The latest from the Guru of audio. Explains audio concepts in easy-to-understand language with plenty of examples and reasoning. Inspiration for audio designers, superb background for audio enthusiasts and especially where it comes to component peculiarities and limitations. Expensive? Yes. Value for money? YES! Highly recommended. 558 pages in paperback.

AUDIO POWER AMPLIFIER DESIGN HANDBOOK

by Douglas Self – 5th Edition 2009 **$85.00***

"The Bible" on audio power amplifiers. Many revisions and updates to the previous edition and now has an extra three chapters covering Class XD, Power Amp Input Systems and Input Processing and Auxiliary Subsystems. Not cheap and not a book for the beginner but if you want the best reference on Audio Power Amps, you want this one! 463 pages in paperback.

See Review March 2010

DVD PLAYERS AND DRIVES

by K.F. Ibrahim. Published 2003. **$71.00***

A guide to DVD technology and applications, with particular focus on design issues and pitfalls, maintenance and repair. Ideal for engineers, technicians, students of consumer electronics and sales and installation staff. 319 pages in paperback.

See Review Feb 2004

SWITCHING POWER SUPPLIES A-Z

by Sanjaya Maniktala, Published April 2012. **$83.00**

Thoroughly revised! The most comprehensive study available of theoretical and practical aspects of controlling and measuring EMI in switching power supplies.

ELECTRIC MOTORS AND DRIVES

By Austin Hughes & Bill Drury - 4th edition 2013 **$59.00***

This is a very easy to read book with very little mathematics or formulas. It covers the basics of all the main motor types, DC permanent magnet and wound field, AC induction and steppers and gives a very good description of how speed control circuits work with these motors. Soft covers, 444 pages.

AC MACHINES

By Jim Lowe Published 2006 **$66.00***

Applicable to Australian trades-level courses including NE10 AC Machines, NE12 Synchronous Machines and the AC part of NE30 Electric Motor Control and Protection. Covering polyphase induction motors, single-phase motors, synchronous machines and polyphase motor starting. 160 pages in paperback.

PRACTICAL VARIABLE SPEED DRIVES & POWER ELECTRONICS

by Malcolm Barnes. 1st Ed, Feb 2003. **$73.00***

An essential reference for engineers and anyone who wishes to design or use variable speed drives for induction motors. 286 pages in soft cover.

See Review Feb 2003

BUILD YOUR OWN ELECTRIC MOTORCYCLE

by Carl Vogel. Published 2009. **$40.00***

Alternative fuel expert Carl Vogel gives you a hands-on guide with the latest technical information and easy-to-follow instructions for building a two-wheeled electric vehicle – from a streamlined scooter to a full-sized motorcycle. 384 pages in soft cover.

*** NOTE: ALL PRICES ARE *PLUS P&P* – *AUSTRALIA ONLY: $10.00 per order; NZ – $AU12.00 PER BOOK; REST OF WORLD $AU18.00 PER BOOK***

To Place Your Order:	INTERNET (24/7)	PAYPAL (24/7)	eMAIL (24/7)	FAX (24/7)	MAIL (24/7)	PHONE - (9-5, Mon-Fri)
	www.siliconchip.com.au/Shop/Books	Use your PayPal account silicon@siliconchip.com.au	silicon@siliconchip.com.au with order & credit card details	Your order and card details to (02) 9939 2648 with all details	Your order to PO Box 139 Collaroy NSW 2097	Call (02) 9939 3295 with order & credit card details

You can also order and pay for books by cheque/money order (Mail Only). Make cheques payable to Silicon Chip Publications.

15/13

ALL TITLES SUBJECT TO AVAILABILITY. PRICES VALID FOR MONTH OF MAGAZINE ISSUE ONLY. ALL PRICES INCLUDE GST

ASK SILICON CHIP

Got a technical problem? Can't understand a piece of jargon or some technical principle? Drop us a line and we'll answer your question. Send your email to silicon@siliconchip.com.au

Fan controller seems confused

I am having some problems with your Intelligent 12V Fan Controller (SILICON CHIP, July 2010).

Initially, I installed the software and the port driver as described in the article and it seemed to be successful. The port appears in Device Manager (under Ports) as Communications Port SILICON CHIP USU Serial Port (COM7); it can be changed in Properties to any unused port number.

When I select COM7 in set-up from Fan Controller (or whatever port number has been assigned for the Fan Controller), I get the error message: "Error Opening COM7". If I immediately select the same port again, the selection seems to hold but if I go to Program Settings and then back to Communications Port Settings, it is no longer set to COM7 but instead shows SELECT again.

At no time does the message on the bottom of the Fan Controller Program change from "Not Connected". If I disconnect sensor "A", I get a short beep from the buzzer in five seconds and then about every 60 seconds after. If I reconnect sensor "A", the buzzer stops sounding. I only have a fan connected to output "1A" during testing. It runs but does not seem to be adjustable and it will also run on any other output with or without sensors fitted.

I have checked both the 5V and 12V rails on the Fan Controller board. The +5V value entered into Program Settings persists but that is probably stored on the computer, not in the Fan Controller. There is 5V between pins 19 & 20 on IC1. When a USB cable is plugged into the computer from the Fan Controller I get the normal Windows sound for a USB connection and the port is assigned as described earlier. I am hoping you can suggest how to get it working. (A. B., via email).

- From the testing that you have done, the Fan Controller does seem to be working OK. The beep when you disconnect sensor A is proof of that. So, the problem must be somewhere in your computer set-up The first thing to check is the USB cable; it's amazing how many are faulty. So try swapping the cable.

The second test would be to load a terminal emulator on your PC (like Tera Term) and open the virtual USB serial port (9600 baud). You should see lines like this once every second: FCD,01,02,03,04,05,06,07,08,09,10, 11,12,13,14,15,16

This is the data coming from the Fan Controller. If you do not see the data then there must be something wrong with your installation of the driver or software and you should try re installing them.

In particular, installing the serial port driver correctly is quite important as most problems have been caused by constructors skipping a step in the installation.

Changing the gain of a preamplifier

I have just built the Universal Stereo Preamplifier (SILICON CHIP, April 1994). The reason for building the preamp is that we have just returned from an extended overseas trip and having got the old Garrard Zero 100 turntable out of storage I wanted to play some of the old vinyl records we have not heard in many years. The

USB Power Injector Not Detected By TV

I have completed the USB Power Injector kit (SILICON CHIP, October 2004) and it has bench-tested OK. I have the following hardware: a USB Seagate 500MB HDD loaded with video programs, a Samsung UA46B7100WF Series 7 HD LCD TV and a Toshiba laptop PC.

When the HDD is plugged into the TV's USB port, the HDD is accessible from the TV, selected video plays OK for five minutes and then a warning message appears on the screen, "USB power overload". Then the HDD is halted. It appears that the TV's USB port cannot support HDD power requirements. A Google search on the subject reports that problem but does not offer any fixes.

On testing the HDD with the Toshiba laptop and USB Power Injector, all works OK. When the HDD and power injector is plugged into the TV's USB port, the TV does not know that a USB device has been plugged in. Does the TV port need some current flow to wake up?

I added a 330Ω resistor and a LED to the injector port (CON1) to draw a modest current of 15mA but the TV did not respond to the USB stimulation. Do I need to increase the 15mA? The TV's USB port works OK with memory sticks. It would be appreciated if you could provide me with any suggestions. (B. W., via email).

- It sounds as if the TV does need a little more current drawn from its USB port before it registers that a device has been connected. We would have expected a current drain of 15mA or so to be sufficient but you would need more information from Samsung to be sure.

However, a LED and a 330Ω resistor in series across pins 1 & 4 of CON1 would not draw 15mA; it would be closer to 10mA. So perhaps you could try reducing the resistor value to, say, 180Ω.

Either that or you could forget the additional LED and resistor and simply replace the 22kΩ and 10kΩ resistors in the divider feeding the base of transistor Q1 with resistors of 220Ω and 100Ω respectively, so the divider itself draws about 15mA.

Digital Input DAC Preamp Next?

I was interested to read the articles on the Classic DAC (Silicon Chip, February & March 2013) which was a large improvement on the earlier one. Is it time for a new high-quality preamplifier? I ask this as looking at the specs provided in the article, the THD+N was of the order 0.01% whereas the same for a preamp designed by yourselves at a much earlier time was of the order 0.001% (sorry – really all I recall was that there was about a factor of 10 difference).

All that said, I have an Oppo DVD player (allegedly with two 32-bit processors) which has all the outputs you can point a stick at. This is connected via analog RCA to my preamp, your earlier Studio Series design. I would prefer to use digital outputs from the Oppo to your DAC but it would appear that this would result in a degradation of the THD+N if inserted.

The question then comes to mind, are we at some time in the future heading for a high-quality preamp with Toslink and S/PDIF digital inputs which would have the specs of your earlier preamp designs or is this limited by the DAC and associated chip set? (C. G., via email).

● There isn't much difference in performance between the CLASSiC DAC and the Ultra-LD Mk.3 Preamplifier, especially when you consider how they are normally used.

THD+N for the CLASSiC DAC is around 0.001% but a lot of that is simply noise. THD+N for the preamp is probably below 0.0004% but that's at a fairly loud volume setting. Depending on the amplifier and speakers etc, you may be running it with much less signal in which case the noise becomes more significant and its THD+N probably approaches that of the DAC's. In either case, the noise is normally low enough that it's inaudible unless perhaps you press your ear up against the speaker grille.

Distortion does rise a bit more for the DAC than the preamp at high frequencies but it's still low enough to be considered essentially inaudible up to fairly high signal frequencies (eg, 10kHz).

Keep in mind that a lot of this is moot if you are using CD source material since the aliasing noise from 16-bit digital data is greater than the noise and distortion contributed by the DAC itself. In other words, there is more distortion inherent in the digital storage medium than there is in the playback equipment. To get the performance figures we are quoting, you generally need to use 24-bit/96kHz or better.

It is possible to reduce distortion at high frequencies from CD material using fancy digital processing, which we've seen done in Marantz CD players. We are not convinced this makes any audible difference but if you want a CD player with distortion of less than .001% at 10kHz then Marantz is a good option. In practice, our DAC will sound pretty much the same.

We are not familiar with Oppo DVD players so we cannot say how the performance will compare or whether you would hear a difference. We are considering doing a preamp as you suggest, based on the CLASSiC DAC, but cannot say when it might appear.

output signal was (obviously) way too low for the inputs of my Bose Lifestyle Home Theatre system, hence the need for a preamp.

However, the preamp works far too well and seriously overloads the AUX inputs of the Bose with unpleasant distortion as a result. Unfortunately, my grasp of electronic circuit design has slipped through non-use over the past 40 years and I am unsure of the best way to reduce the output levels from the preamp. (M. G., via email).

● We assume that your Garrard turntable has a magnetic cartridge fitted. The simplest way to reduce the gain is to increase the 390Ω feedback resistor in series with the 47µF non-polarised capacitor. Try a value of 1kΩ.

Barking dog blaster is audible

I bought the Barking Dog Blaster kit (Silicon Chip, September 2012) and assembled it but I'm not sure if it is working properly. It sounds like it produces low-frequency quiet clicks. It seems to annoy the humans more than the dogs when I operate it.

I tried the audible test and that sounds like it's working properly and also tried adjusting the frequency with the trimpot and it sounds like all it's doing is changing the speed at which the clicks occur. (N. A., via email).

● The clicks that occur each time the ultrasonic drive is started and stopped were minimised by ramping up the pulse drive drive over time from zero to full drive. Similarly when ceasing the drive, the pulse width is slowly reduced to zero. Additionally, the filtering provided by the 47Ω 5W resistor and inductor L1 in conjunction with the capacitance of the four piezo transducers should reduce the clicking to an absolute minimum.

If the clicking is highly audible, check that L1 is connected properly. The coating on the enamelled wire needs to be thoroughly stripped from the wire ends for a good solder joint. If you are not using all four transducers, then extra capacitance will be required across a transducer to give a total of 220nF, as provided by the four transducers.

That's 56nF to be added for every piezo transducer that's not used.

Replacement ignition for a Lycoming engine

I'm looking to develop a replacement for the old magnetos on my Lycoming 6-cylinder engine. I saw part of an article you had on building one and thought I would ask if you could offer any assistance in designing the system. (J. M., via email).

● Have a look at the "Replacement CDI Module For Small Petrol Motors" from the May 2008 issue. This may be able to be incorporated into a 6-cylinder engine that has magneto ignition. How many modules and the actual wiring would depend on the original design. In other words, how many triggers are for firing and how many high-voltage coils are provided. Each

module can fire one ignition coil (or two in parallel) and the high-voltage generator and magneto trigger need to be available for each.

A horizontally-opposed engine may only require three triggers with paralleled ignition coils for the opposing cylinders, one firing as a wasted spark on its exhaust stroke and the other on the compression stroke.

5-stage battery charger wanted

I read your April 2013 article on the Rugged Battery Charger. I applaud you for a cheap, useful project and would like to suggest that you follow this up with an add-on 5 or 7-stage controller (similar to those listed in the current Jaycar catalog). These are expensive and such an add-on would be extremely useful. (J. M., via email).

● We described a 3-stage charger module in the April 2008 issue which should be a suitable match to the charger in the April 2013 issue. It was designed for use with 12V lead-acid and SLA batteries. Arguably, 5 or 7-stage chargers are variations on the basic 3-step (state or stage) charger. They all have their merits. You can access the April 2008 issue on our website at www.siliconchip.com.au

Projects for recreational vehicles

I've just retired and am planning to join all the other oldies clogging up the highways, with my new camper. I've got a couple of recreational vehicle project ideas which your very clever project developers might like to consider.

My particular camper is a slide-on-to-ute-tray type with minimal internal lighting provided by the manufacturer. Other owners use flexible weather-proof SMD LED strip that can be cut to any length, stuck on where required for galley task lighting etc and powered with 12V from the "house" battery. I've just bought a 5-metre roll off Ebay for $20 including postage and the "warm white" colour I chose is actually quite tolerable and easy on the eyes.

You must know this stuff. It uses units of three 3528 surface-mount LEDs connected in series plus a series surface-mount resistor. The units of three LEDs are arranged in parallel between the positive and negative rails, 100 units per 5-metre strip.

I wondered whether the LED strips are over-driven or under-driven at 12V. I cut off a test strip of three units or nine LEDs and tried them on a bench power supply: 75mA at 12V or 25mA per LED string; 90mA at 13V; and 111mA at 14V. I think that even at 12V, the LEDs are slightly over-driven.

Of course, over-driven LEDs are nice and bright; a common practice in el-cheapo LED torches. You addressed this in your cheap LED torch driver in the March 2013 issue which you presented as a solution in search of a problem, considering the $4 cost of said torches. I'm still thinking of building one anyway.

However, my LED strip will be stuck around the inside of my camper and I don't like the idea of having the LEDs slowly fry themselves to death over a period of several years. The replacement cost is not that great but it would take time to peel the strips off, clean up, cut solder and install new strips, and it does seem to negate the vaunted longevity of LEDs.

Any chance of looking into a DC/DC strip LED driver that would drive a strip at optimum current for long life over a voltage range of 10-14V?

Secondly, I'd like to know the charge rate and voltage of the house battery inside the camper as I am driving. I

SemTest LCD Has Incorrect Characters

I recently purchased a programmed PIC16F877A-I/P for the SemTest project (February – May 2012) from you. On completion of the instrument all appears to work as specified but I get "7_" in lieu of "u" on the display eg Ib=207_A instead of Ib=20µA. How does one correct this? (E. A., Freshwater, Qld).

● This problem can really only occur if your 16x2 LCD display module is a slightly different version from the one we used in the SemTest project. The LCD module manufacturer does make a few different versions, each with different 'special symbols' (like the mu) and Chinese characters in the upper part of their internal ROM.

We understand that some of the local electronics suppliers may have received some of the different versions of the LCD modules by mistake, with their shipments of the correct version they ordered. So the best way of correcting the problem is to return the LCD module in your SemTest to the supplier, so they can exchange it for one of the correct version modules.

WARNING!

SILICON CHIP magazine regularly describes projects which employ a mains power supply or produce high voltage. All such projects should be considered dangerous or even lethal if not used safely.

Readers are warned that high voltage wiring should be carried out according to the instructions in the articles. When working on these projects use extreme care to ensure that you do not accidentally come into contact with mains AC voltages or high voltage DC. If you are not confident about working with projects employing mains voltages or other high voltages, you are advised not to attempt work on them. Silicon Chip Publications Pty Ltd disclaims any liability for damages should anyone be killed or injured while working on a project or circuit described in any issue of SILICON CHIP magazine.

Devices or circuits described in SILICON CHIP may be covered by patents. SILICON CHIP disclaims any liability for the infringement of such patents by the manufacturing or selling of any such equipment. SILICON CHIP also disclaims any liability for projects which are used in such a way as to infringe relevant government regulations and by-laws.

Advertisers are warned that they are responsible for the content of all advertisements and that they must conform to the Competition & Consumer Act 2010 or as subsequently amended and to any governmental regulations which are applicable.

L'il Pulser Supply Capacitors Too Tall

I am constructing the L'il Pulser Mk2 Model Train Controller featured in the July 2013 issue of SILICON CHIP. I have purchased the PCB and front/back panels from your parts shop. I have used the instrument case specified in the parts list and the three 2200µF 25V low ESR capacitors as specified.

My humble effort looks remarkably like your magazine pictures. My question is, how do you fit the lid on the enclosure ? The specified capacitors are too tall.

My solution was to purchase a fresh supply of capacitors, leave their leads long (with heatshrink sleeving slipped over them) and lay them over on their sides. Perhaps you might like to alert other readers and purchasers of the PCB etc. (S. O., Tas).

● We were aware of this problem, which is why we specified that the 2200µF capacitors should be no more than 22mm high (in the parts list).

Incidentally, if you are using a switchmode or other DC supply to feed the L'il Pulser, rather than an unsmoothed DC supply, then you probably don't need to use low-ESR capacitors. In those cases, you can just use standard capacitors which may be easier to obtain within the specified height limit.

have a Ctek D250S DC/DC charger right beside the battery at the end of six metres of 8mm cable from the alternator of my vehicle. This is to eliminate the problem of voltage drop over the six metres of cable.

Any chance of a project which wirelessly transmits voltage and charge rate information from sensors at the battery to a receiver and digital display in the vehicle cabin? The key concept here is wireless transmission, to avoid running more cabling between camper and host and getting it through the firewall into the cabin. (P. H., Mackay, Qld).

● The ideal way to drive LED strings is via a constant current driver but this is not practical with the 12V LED strips you refer to because each group of three SMD LEDs already has its own SMD resistor. That means the only practical approach is to drive the whole strip (or strips) from a regulated 12V supply based on a low dropout regulator such as an LM2940CT-12.

On the question of monitoring charge voltage and current, that is certainly possible but it would still be a challenge to transmit from the caravan to a receiver in the cabin because of the shielding effect of the sheet metal.

110VAC drill charger quandary

I have a Ryobi battery drill bought in the USA that requires 110VAC @ 60Hz to recharge the lithium battery via the battery charger. While I can get a transformer to reduce the voltage to 110-115V from 230V, I still have the problem that the output frequency is our 50Hz, not the required 60Hz.

I'm thinking a way round this is to get a car inverter (12VDC to 110VAC) that outputs 60Hz. Would SILICON CHIP have designed an inverter that might do the job? (T. P., via email).

● We have not designed a 60Hz inverter with 110VAC output at any power level. However, your Ryobi battery charger should run satisfactorily with a 50Hz 110VAC supply instead of 60Hz although its transformer may run a little hotter than it otherwise would.

Alternatively, you should be able to get a charger that's suitable for your battery drill and operates from 230VAC 50Hz from a Ryobi stockist. This may be less costly that obtaining a 230VAC to 110VAC transformer.

GPS master clock wanted

Being a person with multiple clocks around the house I never really know the correct time as their drifts differ. Have you or would you design a master clock with a GPS module that sends a signal to one or more slave clocks around the house? Each slave clock would have its own alarm setting function.

The alarm for each of the clocks could also have the ability to use an MP3 file or such. To expand on a slave clock's ability to play an MP3 file, said clock could be set up to play a file to not only wake you up but one also to send you to sleep, such as the slowly increasing sound of waves or white noise.

Or what if the idea were simply a master clock (timed by GPS) and transmitting its time to simple slave clocks with receivers? With the low prices of small data transmitter and receiver modules, it would not be too expensive for most to construct. A constructor could simply build a master and one or more slaves, depending on their needs. (P. R., Bribie Island, Qld).

● What you suggest is certainly feasible but we think there would be very few readers who would want to build such a project.

Battery protection for regulator circuit

I noticed the solar-powered 5W trickle charger for SLA batteries in the Circuit Notebook pages of the June 2013 issue. An editor's comment states that if the battery is connected around the wrong way, ie, reverse polarity, ZD1 would blow etc.

Could this be solved by placing a forward-biased 1N4007 diode in series with the zener diode, ie, with the 1N4007 cathode to ground/negative and the 1N4007 anode to the anode of the zener diode? The zener may have to be reduced because of the voltage drop though, to end up with the same 13.8V from the regulator circuit. (P. H., Gundagai, NSW).

● That approach certainly will protect the zener diode and the transistor's base-emitter junction from damage but it still has problems. First, if the battery is connected around the wrong way, the 10µF electrolytic capacitor at the base of Q1 will still be reversed biased, possibly damaging it. And second, the zener diode would have to changed as you stated to maintain the same output voltage.

LED lighting and dimmable drivers

With the ever-increasing popularity of LED lighting and subsequent to your article on replacing halogen down-lights in the February 2013 issue, it would be great to have an article on dimmable LED lighting/drivers as this seems to be a very confused issue.

I am no expert in this area but am planning to install two TZ DL013

continued on page 96

MARKET CENTRE

Cash in your surplus gear. Advertise it here in SILICON CHIP

Master Instruments **Battery Experts**

Expert advice
Technical expertise
Qualified customised battery & charger solutions

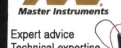

NSW (02) 9519 1200
WA (08) 9302 5444
VIC (03) 9872 6422

sales@master-instruments.com.au
www.master-instruments.com.au

FOR SALE

LEDs! Nichia, Cree and other brand name LEDs at excellent prices. LED drivers, including ultra-reliable linear driver options. Many other interesting and hard-to-find electronic items! www.ledsales.com.au

PCBs MADE, ONE OR MANY. Any format, hobbyists welcome. Sesame Electronics Phone (02) 8068 2713. sesame@sesame.com.au www.sesame.com.au

PCBs & Micros: Silicon Chip Publications can supply PCBs and programmed micros for all recent (and some not so recent) projects described in the magazine. Order online or phone (02) 9939 3295.

SOLAR PANELS LOW COST: full range 5W to 250W, eg: 40W/12V Poly $69, 130W/12V $169, 190W/24V $165, 200W/12V $225, 250W/24V $225, 230W Poly $190.
AGM Batteries: 7AH $19.50, 9AH $24.50, 20AH $52.50, 55AH $129, 105AH $199, 220AH $399.
(03) 94705851 or (03) 9478 0080
chris@lowenergydevelopments.com.au
www.lowenergydevelopments.com.au
544 High St, Preston 3072, Melbourne.

questronix.com.au – audiovisual experts solve home, corporate security and devotional installation & editing woes. QuestAV CYP, Kramer TVone (02) 4343 1970 or sales@questronix.com.au

WANTED

CIRCUIT & DESIGN IDEAS: SILICON CHIP pays up to $60 for Circut Notebook items or you could win a $150 gift voucher from Hare & Forbes. See the Circuit Notebook pages for details.

WANTED: EARLY HIFIs, AMPLIFIERS, Speakers, Turntables, Valves, Books, Quad, Leak, Pye, Lowther, Ortofon, SME, Western Electric, Altec, Marantz, McIntosh, Tannoy, Goodmans, Wharfedale, radio and wireless. Collector/Hobbyist will pay cash. (07) 5471 1062. johnmurt@highprofile.com.au

KIT ASSEMBLY & REPAIR

KEITH RIPPON KIT ASSEMBLY & REPAIR:
* Australia & New Zealand;
* Small production runs.
Phone Keith 0409 662 794.
keith.rippon@gmail.com

VINTAGE RADIO REPAIRS: electrical mechanical fitter with 36 years experience and extensive knowledge of valve and transistor radios. Professional and reliable repairs. All workmanship guaranteed. $10 inspection fee plus charges for parts and labour as required. Labour fees $35 p/h. Pensioner discounts available on application. Contact Alan on 0425 122 415 or email bigal007@internode.on.net

SERVICES

Un-manned Aviation Systems (UAS). Civil Aviation Service Australia (CASA) Application Specialist. Advantage Partnership Lawyers, Tel: (02) 9221 7555. Email: legal.one@advantagepartnership.net Web: www.advantagepartnership.net

ADVERTISING IN MARKET CENTRE

Classified Ad Rates: $32.00 for up to 20 words plus 95 cents for each additional word. Display ads in Market Centre (minimum 2cm deep, maximum 10cm deep): $82.50 per column centimetre per insertion. All prices include GST.

Closing date: 5 weeks prior to month of sale. To book, email the text to silicon@siliconchip.com.au and include your name, address & credit card details, or phone Glyn (02) 9939 3295 or 0431 792 293.

Issues Getting Dog-Eared?

Keep your copies of SILICON CHIP safe with these handy binders

REAL VALUE AT $14.95 PLUS P&P

Order now from www.siliconchip.com.au/Shop/4 or call (02) 9939 3295 and quote your credit card number or mail the handy order form in this issue. *See website for overseas prices.

RFMA RF Modules Australia
Low Power Wireless Connectivity Specialists

SMX1-151-5-100mW
TX POWER NOW 100mW
128 Channel. Narrowband
150.825~152.450MHz
Data rate: 5kbps
Internal 1200baud Modem
Also: SMX1-173-5-100mW (NZ)

Applications:
Rural
Utilities
Industrial
Commercial
Government
Meter Reading

RADIOMETRIX: Low Power, License Exempt

RF Modules Australia. P.O. Box 1957 Launceston, TAS., 7250.
Ph: 03-6331-6789. Email: sales@rfmodules.com.au. Web: rfmodules.com.au

Ask SILICON CHIP

. . . *continued from page 94*

(Samsung 13W chip) down-lights using Tenico UP-15W-D constant current dimmable LED drivers. The dimmer will be a Clipsal trailing-edge variety. All of this is said to be fully compatible by my electrical wholesaler. I have set it up as a test rig and all seems to function correctly. What did surprise me is the "blinding" brightness when the dimmer was turned full on; I was half expecting to see smoke!

I then studied the specs of the lamps and the drivers and this is where I became confused. The lamp spec quotes: voltage 26-30V DC; current 320mA; power 13W; colour 3000K. The Driver spec quotes: constant current dimmable LED driver; primary 200-240VAC @0.11A; secondary DC 23-38V 320mA ± 5%; dimmable with leading/trailing edge or universal dimmer.

The variable DC requirement of the lamp and output of the driver is what confuses me. Is this to do with the constant current requirement of the LEDs? If so, then how is the output voltage controlled so that the current control is correct for the lamp involved?

In my case it would appear that for the lamp to generate its full 13W output at 320mA, the voltage would need to be 40.6V. So why does my lamp quote a maximum rating of 30V @320mA which is only 9.6W? Conversely, as my driver can supply 320mA @ 38V, does this mean that I can overdrive the lamps leading to earlier failure? Then of course one can bring the dimmer into the equation and I am lost!

It would be really good to have an article on this subject so that the mystique of LED lamps, drivers and dimmers can be better understood. Failing that I would appreciate any comments you can make on my particular example. (M. F., Mount Eliza, Vic).

● Normally, LEDs are driven using a current source and the voltage developed across the series string of LEDs is dependent on the characteristics of the LEDs. These have a higher voltage across them with higher current, ie, they have positive impedance. So the LED lamp specifications of 26-30V at 320mA refers to the fact that this is the range of possible voltage across the lamp (of in-series LEDs) when driven at 320mA.

The voltage depends on the individual LEDs themselves and can vary from manufacturing batch to batch. The 26-30V refers to the specified limits that the LED voltage could be at that 320mA current.

So long as it can deliver the required voltage range of 26-30V at 320mA, then the driver should be suitable and it can drive the LED lamp correctly. The voltage across the LED lamp will settle at the voltage that allows 320mA current to flow. When dimmed, the average current is lowered by reducing the pulse width of the applied current so that the lamp receives less power. The power discrepancy may be that 13W is the total power of the LEDs plus the driver. SC

DOWNLOAD OUR CATALOG AT
www.iinet.net.au/~worcom
WORLDWIDE ELECTRONIC COMPONENTS
PO Box 631, Hillarys, WA 6923
Ph: (08) 9307 7305 Fax: (08) 9307 7309
Email: worcom@iinet.net.au

Notes & Errata

Nixie Clock, July 2007: the circuit diagram (Fig.1) shows pin 14 of IC1 connected to pin 12 of IC2. The connection should in fact go to pin 11 of IC2.

The PCB layout diagram on page 73 of the August 2007 issue is correct.

Advertising Index

Advantage Partnership Lawyers .. 95
Altronics 17
element14 5
Emona Instruments 3
Harbuch Electronics 10
Hare & Forbes 39
High Profile Communications 95
Icom Australia 7
Jaycar IFC,45-52
Keith Rippon 95
KitStop 11
LED Sales 95
Low Energy Developments 95
Master Instruments 95
Microchip Technology ..... OBC
Mikroelektronika ..... IBC
Ocean Controls 29
Premier Batteries 55
Quest Electronics 95
Radio, TV & Hobbies DVD 11
RF Modules 96
Sesame Electronics 95
Silicon Chip Binders 95
Silicon Chip Bookshop 90
Silicon Chip Online Shop 88-89
Silicon Chip Subscriptions 81
Tekmark Australia 9
Wiltronics 65
Worldwide Elect. Components 96
xLogic 9

32-bits and **pieces**

...but who's counting

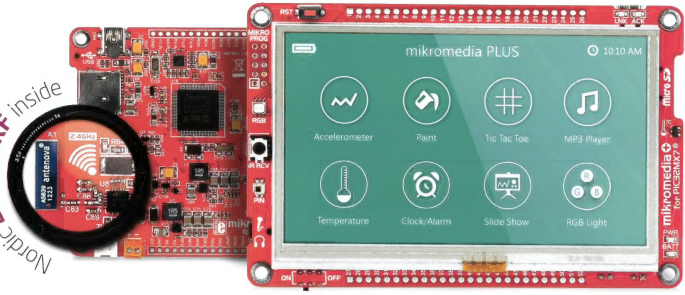

price: **$199**[00]

mikromedia+ for PIC32MX7

Fiery red color is there for a reason. This piece of tech will make your geek adrenalin level rise up! With 32 different modules, you'll be hardly missing anything. There are tons of stuff on-board: 4.3" touch screen, RF, accelerometer, Ethernet, sensors, mp3 codec, battery charger - you name it and it's there! All is driven by the mighty PIC32MX795F512L microcontroller. So, tell your wife to make sandwiches and coffee, 'cause you'll be up playing with this board all night long.

MikroElektronika
DEVELOPMENT TOOLS | COMPILERS | BOOKS

GET IT NOW
www.mikroe.com

Design-In Advanced Graphics Displays Quickly and Easily

Microchip Technology's display solutions offer the ability to quickly integrate graphics display functions into existing applications in a single microcontroller—reducing development risk, total system cost and time to market. The PIC® MCUs can drive everything from simple monochrome LCDs to full color WVGA user interfaces.

The PIC24F "DA" family features hardware acceleration and an integrated graphics controller to directly drive a graphical display. The "DA" family includes USB and touch interfaces as well as 96 KB of RAM to store the frame buffer, eliminating the need for external memory.

PIC32 controllerless graphics solution uses the high performance DMA to render graphics directly to graphical displays without the need for an external graphics controller. The PIC32 family includes up to 128 KB RAM for frame buffering and also integrates touch, USB, Ethernet and CAN for remote interfaces.

MICROCHIP MAKES IT EASY TO EMBED GRAPHICS INTO YOUR NEXT DESIGN:

1. **Free Graphics Library** – with full source code, includes buttons, charts, scroll bars, images and support for multiple fonts & languages
2. **Free Graphics Display Designer Visual Design Tool** – simplifies code development and generates output source files
3. Flexible hardware development kits allow interface to various glass sizes.

www.microchip.com/graphics

microchip DIRECT
www.microchipdirect.com

Microchip Technology Australia
Tel: (02) 9868 6733 E-mail: aust_nz.inquiry@microchip.com

MICROCHIP

Microcontrollers • Digital Signal Controllers • Analog • Memory • Wireless

The Microchip name and logo, the Microchip logo and PIC® logo are registered trademarks of Microchip Technology Incorporated in the U.S.A. and other countries. All other trademarks mentioned herein are property of their respective companies.
© 2013 Microchip Technology Incorporated. All rights reserved.